İES GALVANİZ

Roads are Safer With İES GALVANİZ

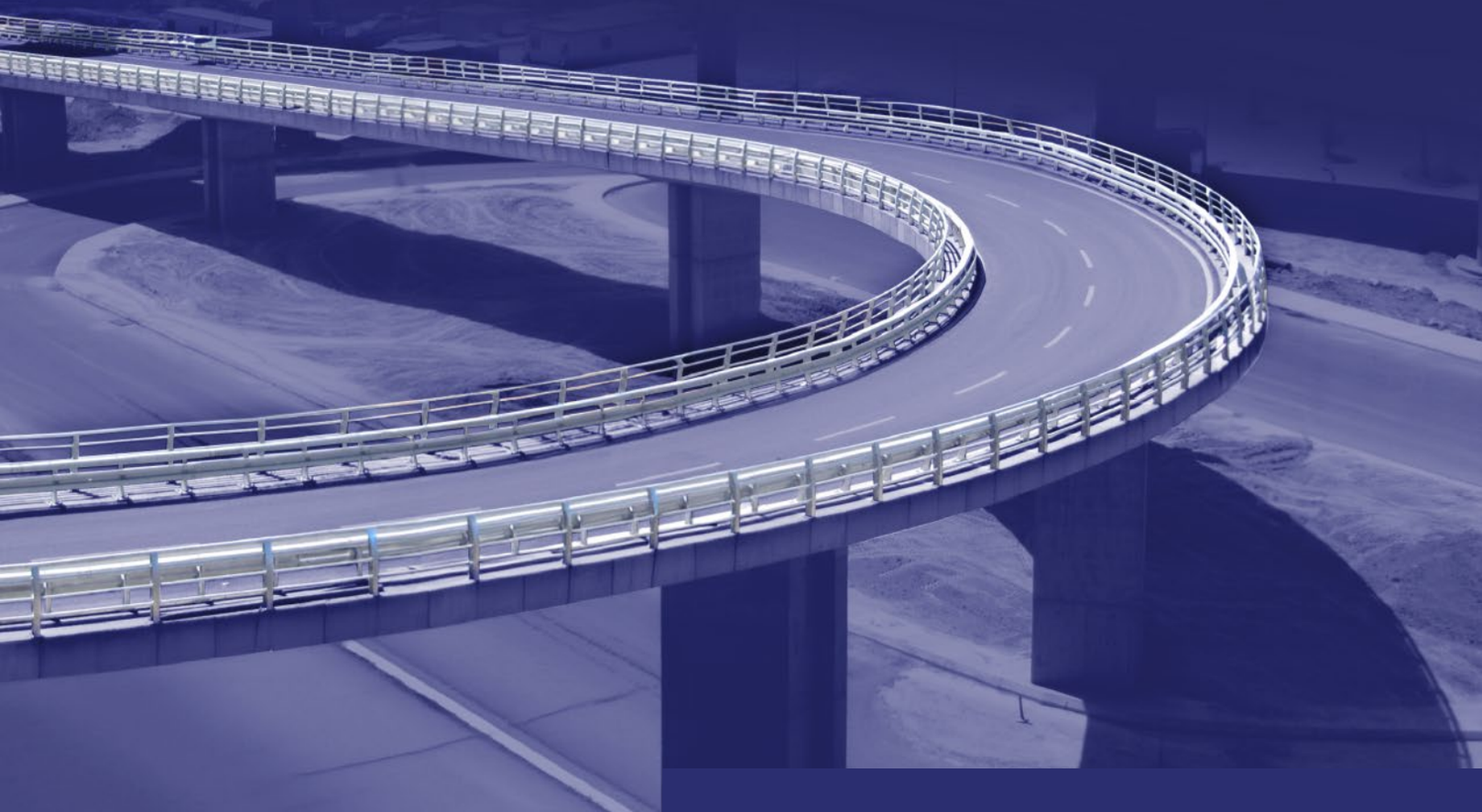

İES GALVANİZ

NABİL JAMAL KASAB

Chairman of Board

We started our construction sector activities in 1982 and expanded by adding electrical equipment trade in 2002. We increased our experience and reputation in the sector by supplying electrical cables, poles and aluminum conductors for power transmission lines from reliable suppliers with international certificates. With the experience we gained in this process, we started production investments in Turkey in 2006 by establishing Iman Elektrik Limited Company and started producing electricity poles in our facilities in Zonguldak in 2010. In 2013, we established our fleet of 20 vehicles to provide logistics services.

With our pre and after-sales support focused on customer satisfaction, our expert team and solutions suitable for competitive market conditions, we have become a recognized and preferred brand in the sector. In 2015, we laid the foundation of our IES Galvaniz factory on an area of 50,000 m^2 in Osmaniye Organized Industrial Zone and commissioned our facility with 20,000 m^2 closed area equipped with state-of-the-art machines and control systems in 2018.

As IES Galvaniz, we have adopted the principle of providing customer-oriented solutions with an environmentally and human-friendly approach without compromising quality. Our mission is to be the most reliable and preferred brand in the sector, and our vision is to grow without compromising product and service quality by opening up to world markets.

In this journey, under the leadership of our Vice Chairman of the Board **Mr. Zeki Özdemir** , we continue to strengthen our leading position in the sector by focusing on sustainable success.

About Us

Founded in Osmaniye Organized Industrial Zone in 2015, **İES Galvaniz** has started its activities with its **50.000 m²** open and **20.000 m²** closed area, for metal manufacturing and hot dip galvanizing plant for the energy and steel industry, which is an important necessity at the present day.

İES Galvaniz operates on the project and manufacturing of domestic and international energy distribution line poles, energy transmission line poles, all kinds of lighting poles, photovoltaic (Solar Energy) carrier structure systems, road barriers, steel construction, projector poles, decorative poles and so on.

Since the day it was established, the company, which supports creativity and team spirit for its employees, enables personal development, and aims to provide a transparent working environment where ideas can be freely shared and the company objectives are internalized at all levels.

İES Galvaniz fulfills its responsibilities within the scope of the respect of the society and the environment while carrying out its high quality production. İES Galvaniz has determined its Environmental Policy as follows;

- To prevent environmental contamination and to reduce pollution at source,
- To carry out environmental activities and production in accordance with environmental management system standards,
- To provide environmental standards of customers and to operate in accordance with these rules,
- To engrain in preventing resource wastage and environmental awareness to all employees.

As İES Galvaniz, as it moves rapidly on the way to becoming a world company, it has also set delivering our nature which we will entrust to our children without polluting it as a target and task for itself.

With its vast knowledge, experience and references, our company maintains its high quality position in the sector. Our experienced and innovative team, whose Works are carried out based on customer satisfaction and focused on results, continues to work without deviating from its goal by providing up-to-date knowledge and experience to its stakeholders.

With the following certificates our company has owned since the year it was established;

- Quality Management System (ISO-9001)
- Environmental Management System (ISO-14001:2004)
- Turkish Standards Institute (TSEK-TSE),
- Occupational Safety (OHSAS-18001),
- Compliance with European Norms (CE)

it shows the importance it attaches to its business with these documents and also continuously expands its vision with the latest technology investments.

Production Range:

- Energy distribution Poles,
- Energy Transmission Line Poles,
- Antenna Poles,
- Telecommunication towers (Radio-Link, GSM, Antenna),
- Miscellaneous Industrial Steel Constructions,
- Highway Omega Poles,
- Connection Clamps,
- Grounding Strip, Grounding Plate, Grounding Rod,
- Advertising Panel Cases,
- Traffic Sign Panel Cases,
- Highway Guardrails and Barriers,
- Polygon Pole, Pipe Poles and Flag Poles
- Photovoltaic (Solar Energy) Carrier Building Systems,
- Advertising Logo Cases and Poles,
- Specially Designed Poles and Steel Construction, Transformer Station and steel constructions
- Lightning Rod Pole, Projector Pole, Stadium Lighting Pole
- Wind Energy System Poles and Constructional Components
- Galvanized Anchor,
- Garbage Containers,
- Galvanized Coating processes are included

All these products are coated with "Hot Dipped Galvanize" according to international standards of **ASTM A123, ISO EN 1461**.

Mission

In the energy, telecommunication and construction sectors it serves, to maintain continuous development, quality, customer satisfaction, error-free and timely product delivery, reasonable price policy, sense of environmental awareness for people and green with a contemporary management approach.

İES GALVANİZ

www.iesgalvaniz.com

Vision

To be the pioneer of quality, sensitive to human and environment with an innovative perspective by following technological developments in the fields where it operates.

Our Goals

- To target continuous improvement in quality products and services it presents,
- To continuously increase our targets as well as sustainable and profitable growth
- To contribute to the environment and society with the products it provides by working with the awareness of social and environmental responsibilities,
- To move İES Galvaniz to leadership in Turkey and the level of worldwide companies by acting with a team spirit.
- To keep customer satisfaction at the highest level by providing high quality of product manufacturing and service with a forward-looking approach,

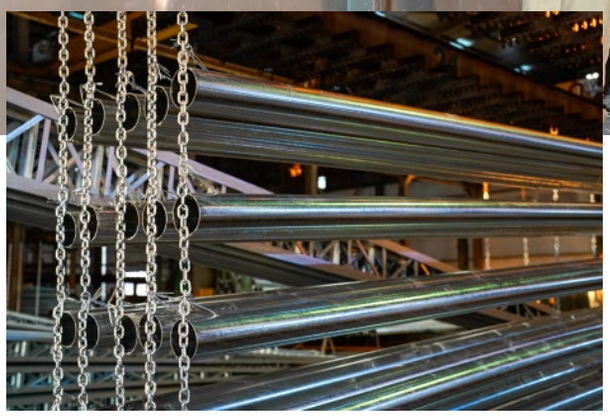

Galvanising

The prevention or control of corrosion, which is a natural phenomenon, is possible by various methods. The most effective of these methods is "Hot Dip Galvanized" (HDG) coating. We increase the resistance of steel to nature by means of galvanized coating for longer periods of time. This coating is a high value-added process that contributes to the economy of the country.

Galvanized coating process, which is the most effective and permanent method of protecting the steel against corrosion is carried out by immersing the steel products in the molten zinc bath at approximately 450°C after surface cleaning processes and subsequently, putting them through cooling and/or passivation operations. The entire surface of the dipped product, including the enclosed volumes, is completely coated with zinc. Zinc, which has a long-standing structure, creates a metallurgical bond with the steel. It creates a kind of shield against corrosion and extends the life of steel. When we list the advantages of HDG; It provides many advantages such as Being Economical, Long Life, Reliability, Holistic, Being Eco-Friendly, and Ease in Quality Control.

İES Galvaniz, which started out with the principle of human health, protection of the environment and quality, has proven itself in the sector with its investment with its fully automated galvanizing plant.

Our Galvanising Pool Size:

- 14 m length x 1,6 m width x 3,6 m depth
- Capacity: 150,000 Ton/year

Application Areas of Galvanization:

- Lighting Poles
- Steel Building Column Beams
- Industrial Grids
- Industrial Plant Steel Constructions
- Energy Transmission Lines
- GSM Towers
- Highway Sign Boards
- Highway Railings
- Transformer Buildings
- Emergency Exit Ladders
- Road Signs
- Garbage Containers

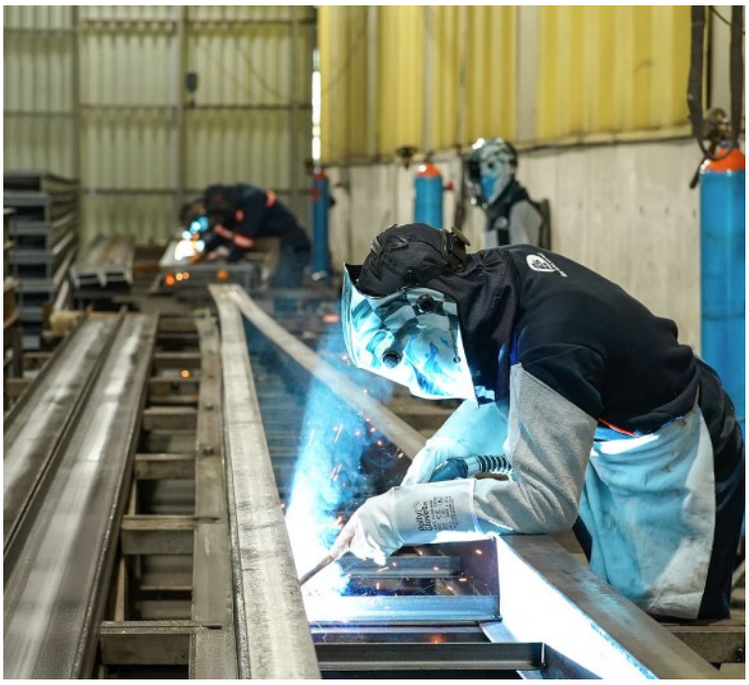

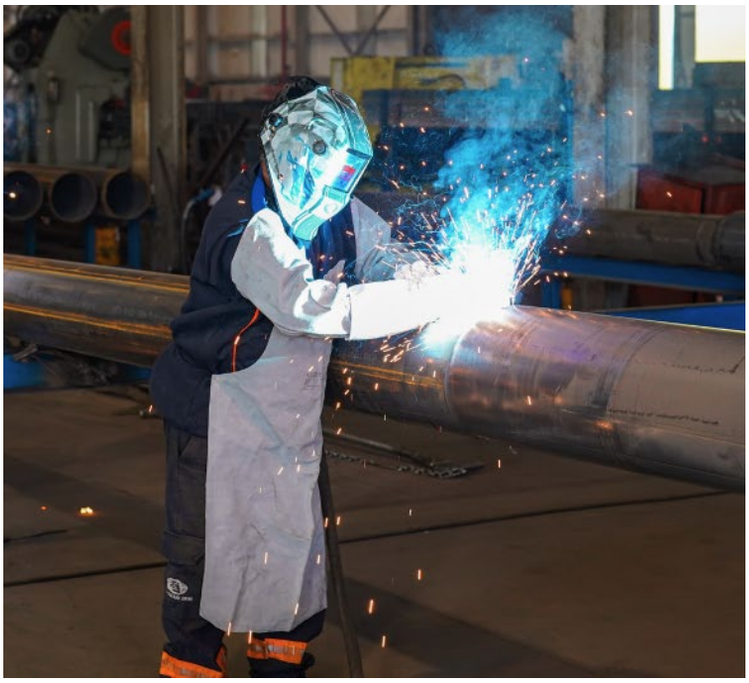

The Power of Welding, Your Project's Assurance!

At the heart of your industrial needs lies our welded manufacturing expertise! Our team, specialized in joining steel and metal alloys, brings high strength, flexibility, and longevity to your projects. Through our production processes supported by galvanizing coating, we add value to your infrastructure by taking welded manufacturing to the next level.

With our hot-dip galvanizing process applied after production:
We protect the entire surface against corrosion, including welded areas
We provide coating thickness of 85-100 microns in accordance with TS EN ISO 1461 standards
We make your products resistant to harsh climate conditions and chemical exposure
Let us build the future of your infrastructure with our expertise in welded manufacturing. Our comprehensive approach combines precision welding with superior surface protection, ensuring lasting quality for your industrial investments.

Key Features:
Advanced welding technologies
Certified galvanizing processes
Complete corrosion protection
Industry-leading quality standards
Comprehensive project solutions
Through our integrated manufacturing and coating processes, we deliver solutions that stand the test of time, ensuring your infrastructure investments maintain their integrity and performance for decades to come.

Excellence in Welding, Perfection in Protection!

EN 1317-2 EUROPEAN STANDARD

TABLE-1: VEHICLE IMPACT TEST CRITERIA				
Test	Impact Peed Km/h	Impact Angle Degrees	Total Vehicle Mass kg	Type of Vehicle
TB 11	100	20 ^{0}	900	Car
TB 21	50	8 ^{0}	1.300	Car
TB 22	80	15 ^{0}	1.300	Car
TB 31	80	20 ^{0}	1.500	Car
TB 32	110	20 ^{0}	1.500	Car
TB 41	70	8 ^{0}	10.000	Rigit HGV
TB 42	70	15 ^{0}	10.000	Rigit HGV
TB 51	70	20 ^{0}	13.000	Bus
TB 61	80	20 ^{0}	16.000	Rigit HGV
TB 71	65	20 ^{0}	30.000	Rigit HGV
TB 81	65	20 ^{0}	38.000	Articuladet HGV

TABLE-2: CONTAINMENT LEVELS		
Containment Levels		Acceotance Test
Low Angle Containment	T1	TB21
	T2	TB22
	T3	TB41 ve TB21
Normal Containment	N1	TB31
	N2	TB32 ve TB11
Higher Containment	H1	TB42 ve TB11
	L1	TB42 ve TB32 ve TB11
	H2	TB51 ve TB11
	L2	TB51 ve TB32 ve TB11
	H3	TB61 ve TB11
Very Higher Containment	H4a	TB71 ve TB11
	H4b	TB81 ve TB11
	L4a	TB71 ve TB32 ve TB11
	L4b	TB81 ve TB32 ve TB11

TABLE-3: IMPACT SEVERITY LEVELS			
Impact Severity Level	Index Values		
A	ASI ≤1,0	AND	THIV ≤33 KM/H PHD ≤ 20 g
B	ASI ≤1,4		

TABLE-4: LEVELS OF WORKING WIDTH
W1 ≤ 0,6
W2 ≤ 0,8
W3 ≤ 1,0
W4 ≤ 1,3
W5 ≤ 1,7
W6 ≤ 2,1
W7 ≤ 2,5
W8 ≤ 3,5

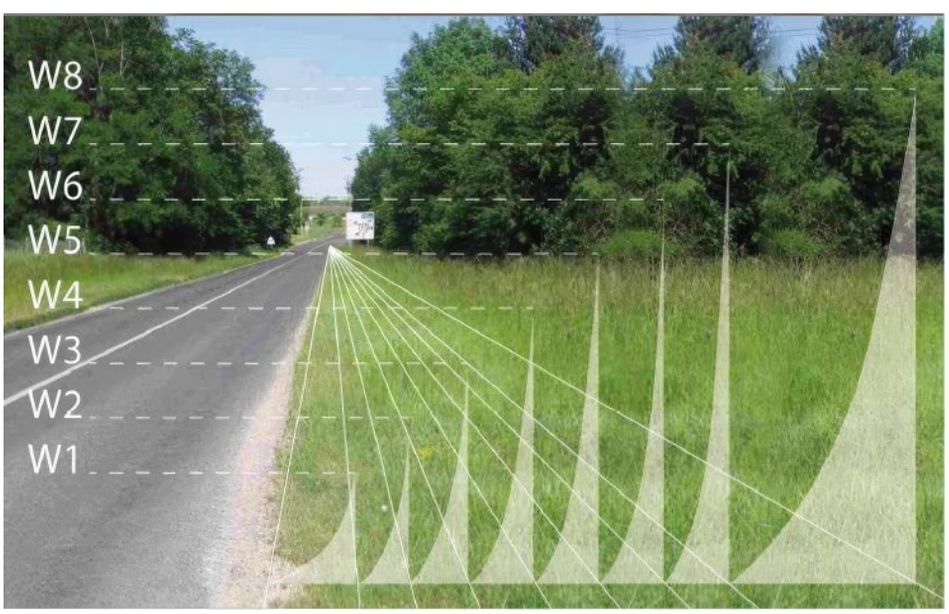

Single Sided Driven Guardrail Systems

NO	SYSTEM NAME	CLASS
1.1	S.01.202 AG04M 2.00 System	H1-W4-A N2-W2-A
1.2	S.01.204 AG04M 2.66 System	H1-W3-A N2-W2-A
1.3	S.01.206 AG04H1 4.00 System	H1-W1-A N2-W4-A
1.4	S.01.301 AG03H2M 2.00 System	H2-W4-A
1.5	S.01.303 AG03H2 2.66 System	H2-W4-A
1.6	S.01.307 AG03H2SM 2.00 System	H2-W3-A
1.7	S.01.308 AG02H2 1.33 System	H2-W2-A
1.8	S.01.602 AG01H4b 2.00 System	H4b-W5-A

S.01.202

S.01.202 AG04M 2.00 SYSTEM (H1-W4-A) (N2-W2-A)		
Containment Level According to EN 1317-2	H1, N2	
Impact Severity	A	
Working Width	W4 (1,1m) (H1), W2 (0,8m) (N2)	
Dynamic Deflection	1,0 m(H1), 0,8 m (N2)	
Normalized Vehicle Intrusion	VI6 (1,8 m)	
Beam Type	A, B	
Construction Heighet / Width	75 cm 7 20 cm	
Unital Type Test (ITT)	TB11: 0004\ME\HRB\12 R2	TB32: 0003\ME\HRB\12 R2
	TB42: 0037\ME\HRB\14 R2	Endorsement

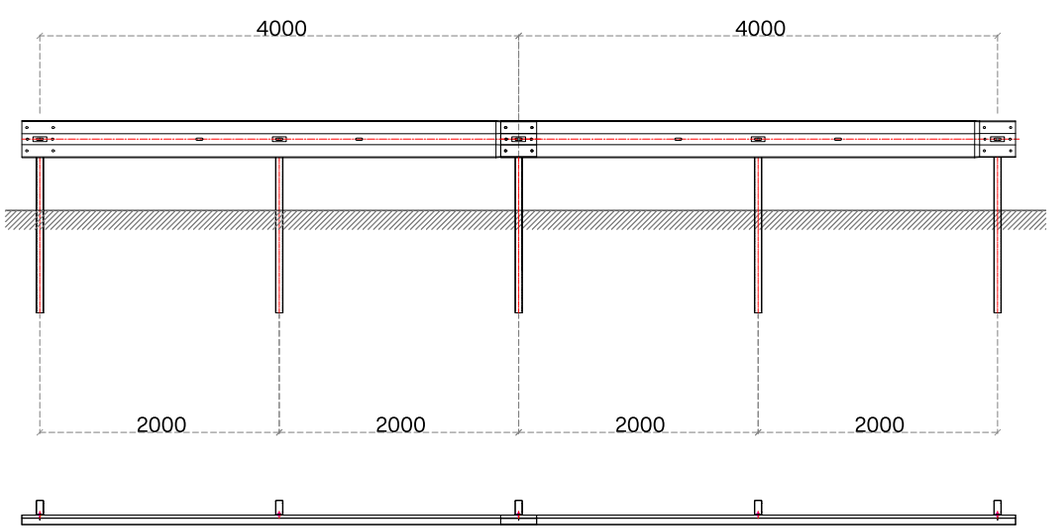

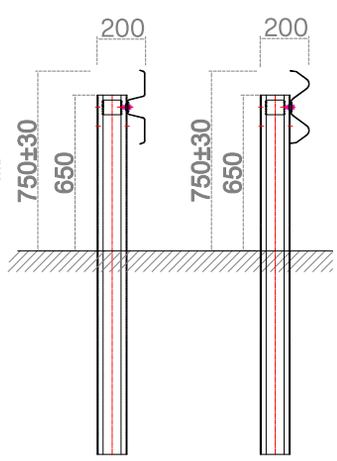

S.01.204

S.01.204 AG04M 2.66 SYSTEM (H1-W3-A) (N2-W2-A)		
Containment Level According to EN 1317-2	H1, N2	
Impact Severity	A	
Working Width	W3 (0,9m) (H1), W2 (0,8m) (N2)	
Dynamic Deflection	0,9 m(H1), 0,7 m (N2)	
Normalized Vehicle Intrusion	VI5 (1,6 m)	
Beam Type	A, B	
Construction Heighet / Width	75 cm 7 20 cm	
Unital Type Test (ITT)	TB11: 0142\ME\HRB\14	TB32: 0150\ME\HRB\14
	TB42: 0139\ME\HRB\14	Endorsement

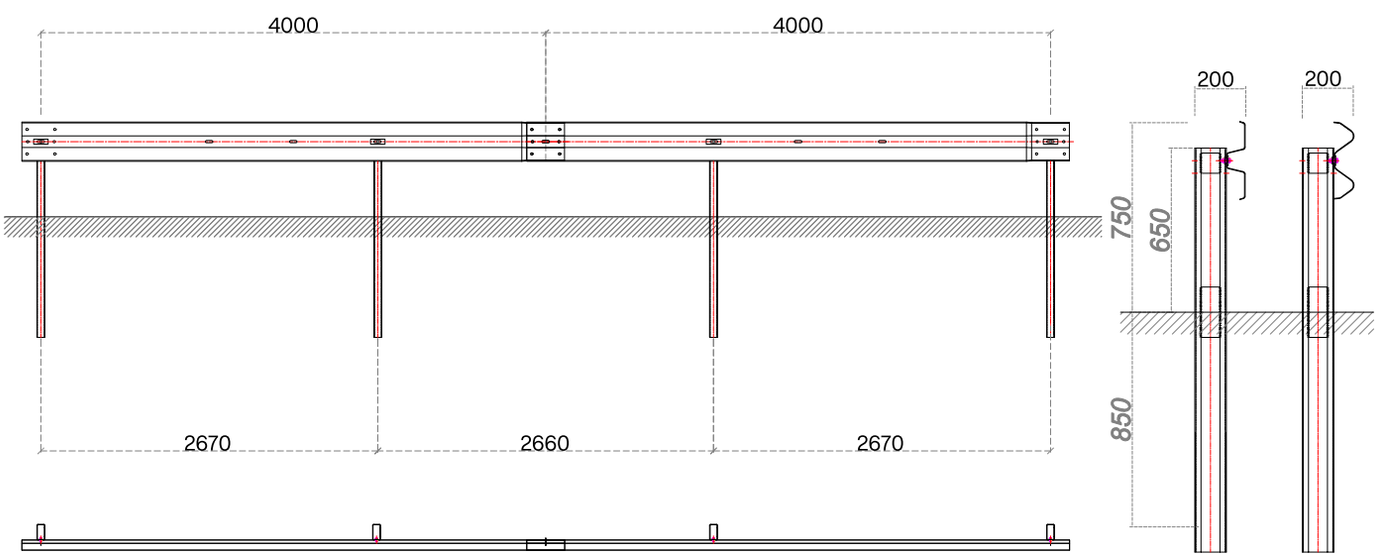

S.01.206

S.01.206 AG04H1 4.00 SYSTEM (H1-W4-A) (N2-W4-A)		
Containment Level According to EN 1317-2	H1, N2	
Impact Severity	A	
Working Width	W4 (1,2m) (H1), W4 (1,2m) (N2)	
Dynamic Deflection	1,2 m (H1), 1,2 m (N2)	
Normalized Vehicle Intrusion	VI8 (2,7 m)	
Beam Type	A, B	
Construction Heighet / Width	75 cm / 20 cm	
Unital Type Test (ITT)	TB11: 0025\ME\HRB\17	TB32: 0027\ME\HRB\17
	TB42: 0024\ME\HRB\17	Endorsement

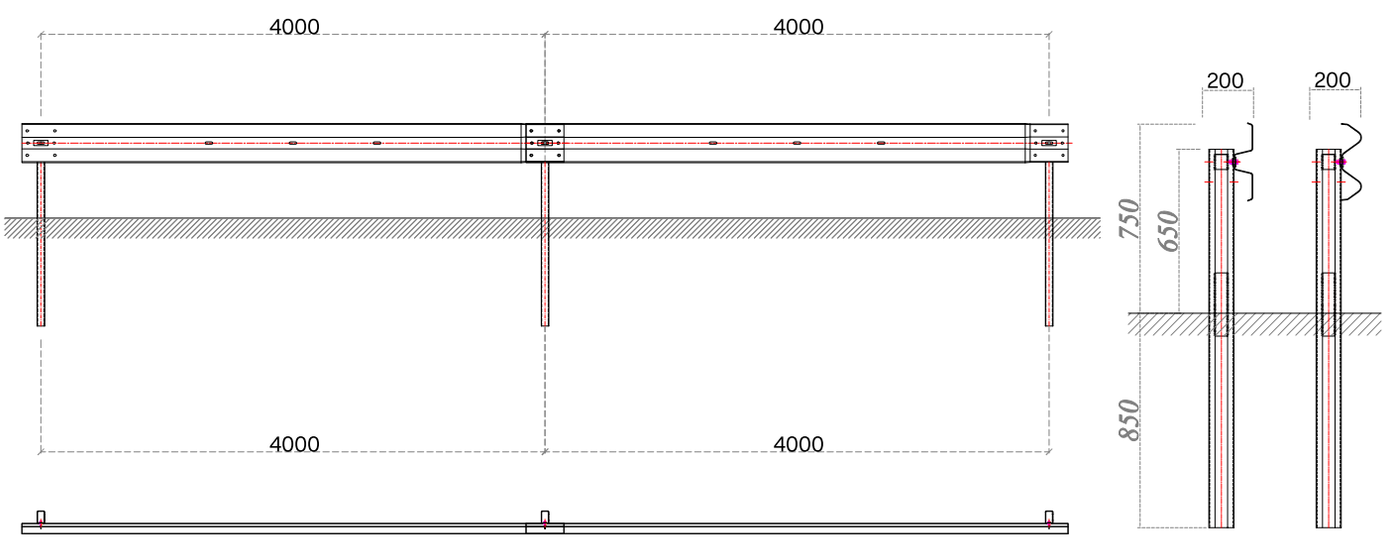

S.01.301

S.01.301 AG03H2M 2.00 SYSTEM (H2-W4-A)		
Containment Level According to EN 1317-2	H2	
Impact Severity	A	
Working Width	W4 (1,2 m)	
Dynamic Deflection	1,2 m	
Normalized Vehicle Intrusion	VI3 (1,0 m)	
Beam Type	3N	
Construction Heighet / Width	90 cm / 20 cm	
Unital Type Test (ITT)	TB11: 0085\ME\HRB\13	Endorsement
	TB51: 0058\ME\HRB\14	

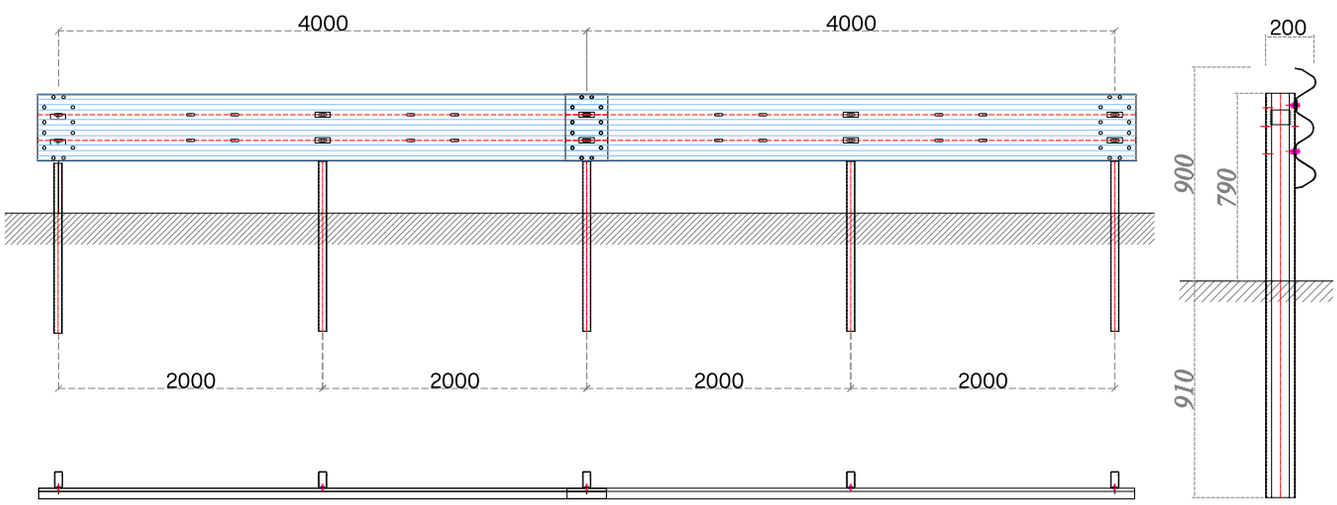

S.01.303

S.01.303 AG03H2 2.66 SYSTEM (H2-W4-A)		
Containment Level According to EN 1317-2	H2	
Impact Severity	A	
Working Width	W4 (1,2 m)	
Dynamic Deflection	1,1 m	
Normalized Vehicle Intrusion	VI5 (1,5 m)	
Beam Type	3N	
Construction Heighet / Width	90 cm / 20 cm	
Unital Type Test (ITT)	TB11: 0085\ME\HRB\13	Endorsement
	TB51: 0004\ME\HRB\	

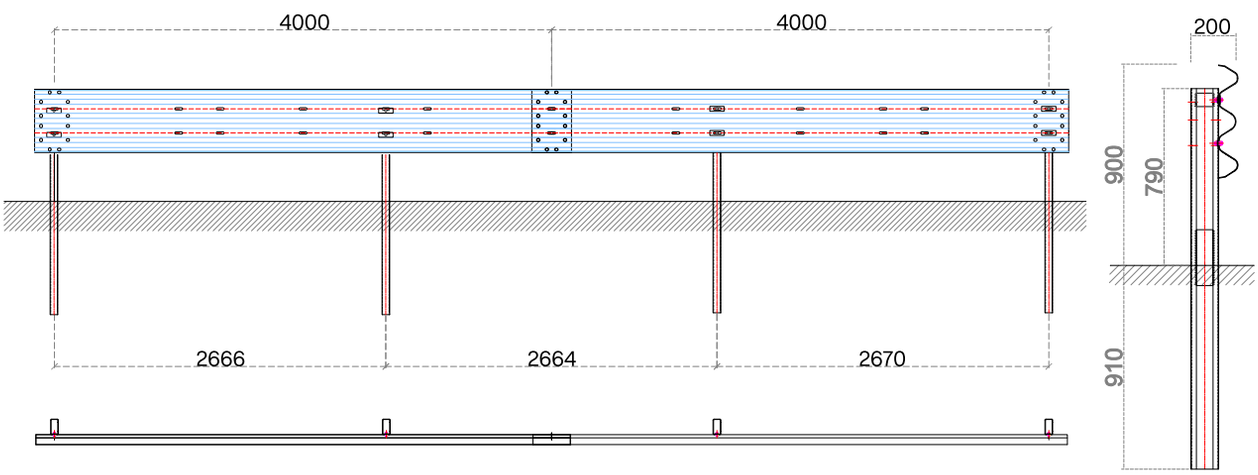

S.01.307

S.01.307 AG03H2 SM 2.00 SYSTEM (H2-W3-A)	
Containment Level According to EN 1317-2	H2
Impact Severity	A
Working Width	W3 (0,9 m)
Dynamic Deflection	0,5 m
Normalized Vehicle Intrusion	VI4 (1,2 m)
Beam Type	3N
Construction Heighet / Width	95 cm / 31 cm
Unital Type Test (ITT)	TB11: 0086\ME\HRB\19
	TB51: 0063\ME\HRB\19

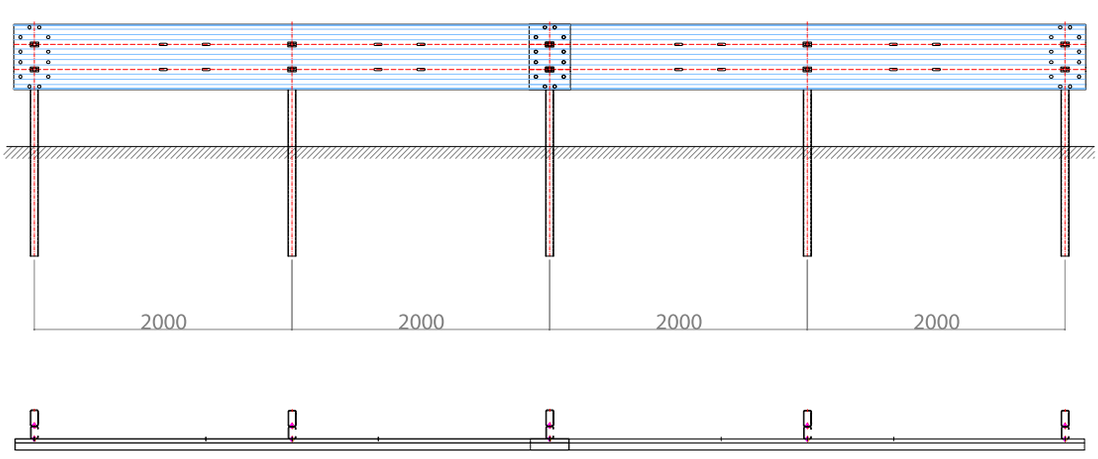

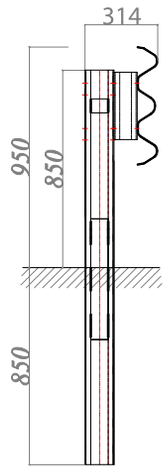

S.01.308

S.01.308 AGO2H2 1.33 SYSTEM (H2-W2-A)	
Containment Level According to EN 1317-2	H2
Impact Severity	A
Working Width	W2 (0,8 m)
Dynamic Deflection	0,7 m
Normalized Vehicle Intrusion	VI3 (1,0 m)
Beam Type	3N
Construction Heighet / Width	95 cm / 31 cm
Unital Type Test (ITT)	TB11: 0103\ME\HRB\20 TB51: 0100\ME\HRB\20

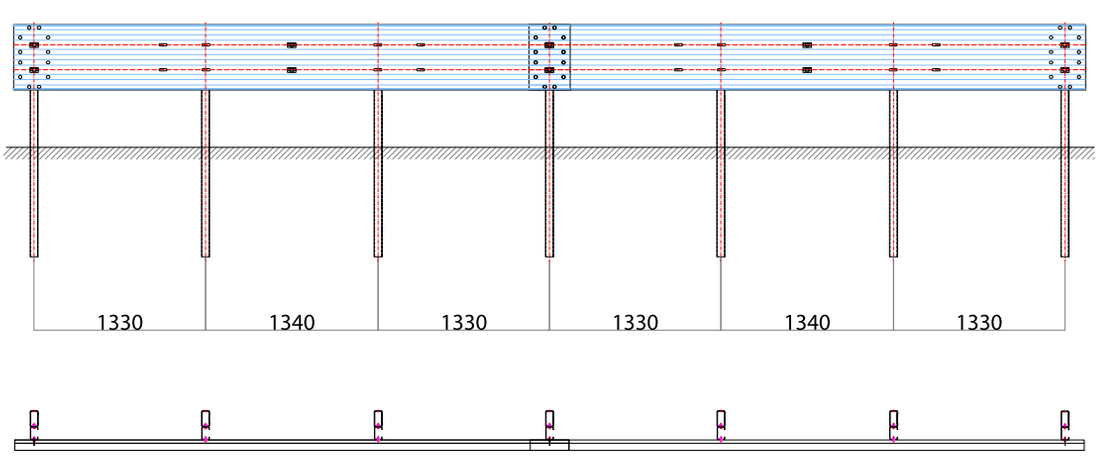

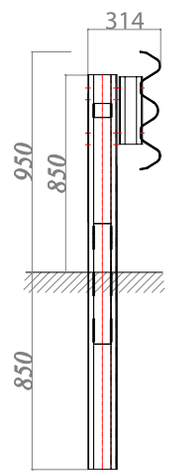

S.01.602

S.01.602 AG1H4b 2.00 SYSTEM (H4b-W5-A)	
Containment Level According to EN 1317-2	H4b
Impact Severity	A
Working Width	W5 (1,7 m)
Dynamic Deflection	1,6 m
Normalized Vehicle Intrusion	VI5 (1,7 m)
Beam Type	3N
Construction Heighet / Width	120 cm / 55 cm
Unital Type Test (ITT)	TB11: 0012\ME\HRB\15 TB81: 0013\ME\HRB\15

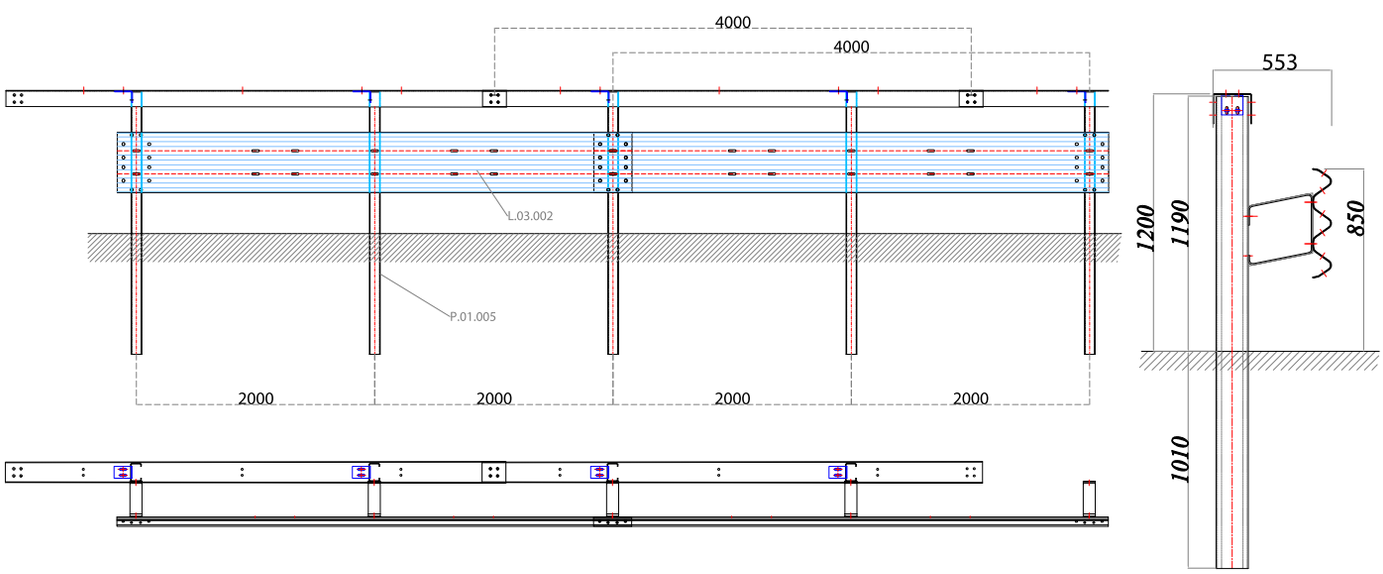

Single Sided Bridge Guardrail Systems

NO	SYTEMS NAME	CLASS
2.1	S.02.201 AG04 2.00 Bridge System	H1-W2-A
2.2	S.02.202 AG04 1.33 Bridge System	H1-W1-B
2.3	S.02.302 AG04H2M 2.00 Bridge System	H2-W4-B
2.4	S.02.307 AG03H2SM 2.00 Bridge System	H2-W3-B
2.5	S.02.308 AG03H2SM 1.33 Bridge System	H2-W2-B
2.6	S.02.601 AG01H4b 2.00 Bridge System	H4b-W3-A

S.02.201

S.02.201 AG04 2.00 BRIDGE SYSTEM	
Containment Level According to EN 1317-2	H1
Impact Severity	A (Tip B), B (Tip A)
Working Width	W2 (0,8 m)
Dynamic Deflection	0,7 m
Normalized Vehicle Intrusion	VI8 (2,8 m)
Beam Type	A, B
Construction Heighet / Width	75 cm / 20 cm
Unital Type Test (ITT)	TB11: 0111\ME\HRB\14 Endorsement TB42: 0109\ME\HRB\14

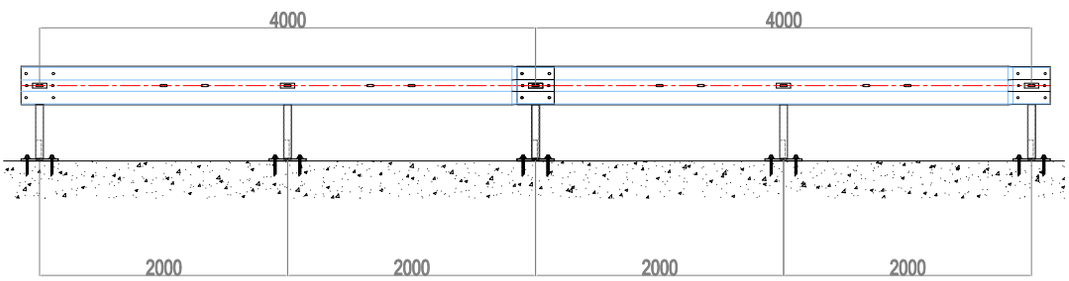

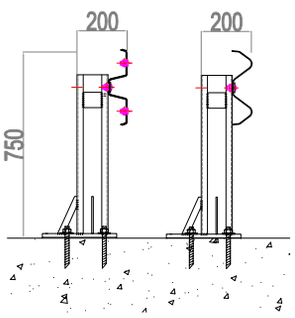

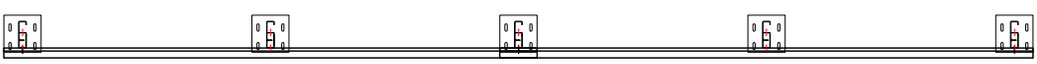

S.02.202

S.02.202 AG04 1.33 BRIDGE SYSTEM	
Containment Level According to EN 1317-2	H1
Impact Severity	B
Working Width	W1 (0,5 m)
Dynamic Deflection	0,3 m
Normalized Vehicle Intrusion	VI4 (1,2 m)
Beam Type	A, B
Construction Heighet / Width	75 cm / 20 cm
Unital Type Test (ITT)	TB11: 0047\ME\HRB\14.R.1 Endorsement TB42: 0041\ME\HRB\14.R.1

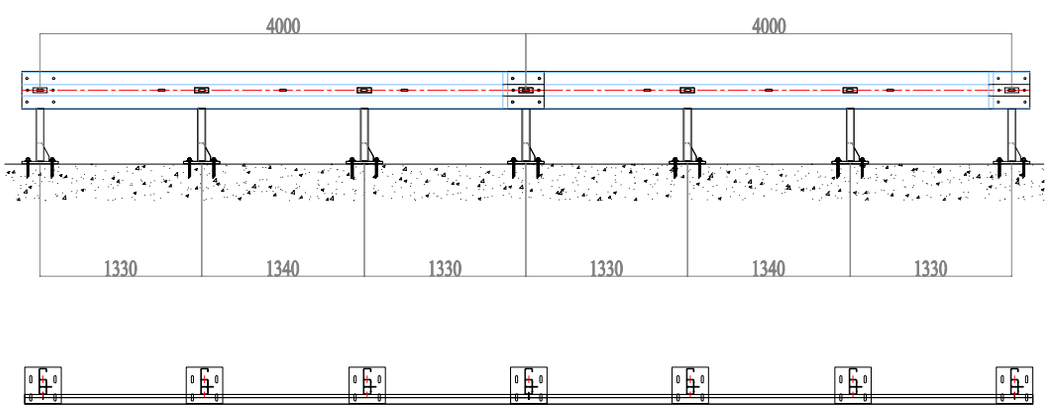

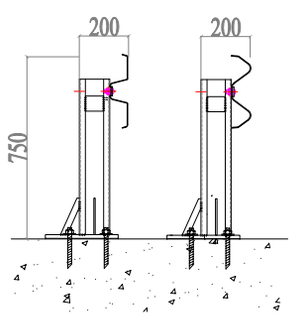

S.02.302

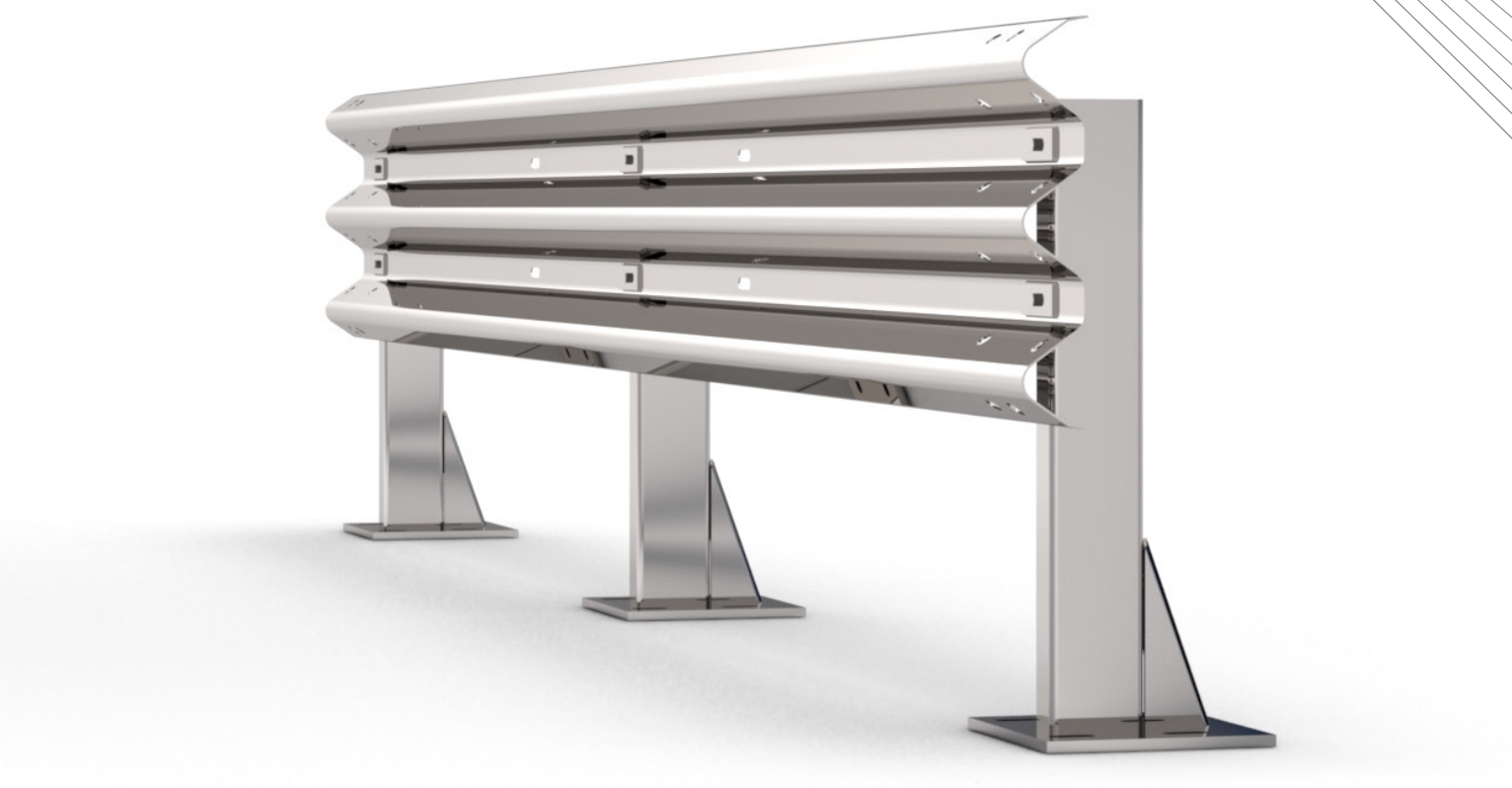

S.02.302 AG04H2M 2.00 BRIDGE SYSTEM	
Containment Level According to EN 1317-2	H2
Impact Severity	B
Working Width	W4 (1,2 m)
Dynamic Deflection	0,9 m
Normalized Vehicle Intrusion	VI5 (1,6 m)
Beam Type	3N
Construction Heighet / Width	90 cm / 20 cm
Unital Type Test (ITT)	TB11: 0126\ME\HRB\13 Endorsement TB51: 0151\ME\HRB\14

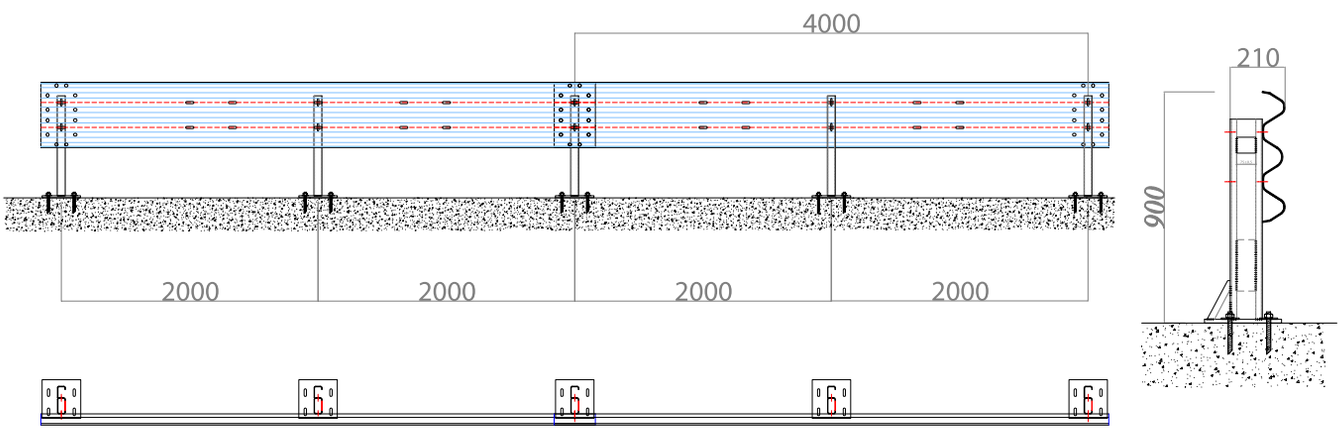

S.02.307

S.02.307 AG03H2SM 2.00 BRIDGE SYSTEM		
Containment Level According to EN 1317-2	H2	
Impact Severity	B	
Working Width	W3 (1,0 m)	
Dynamic Deflection	0,7 m	
Normalized Vehicle Intrusion	VI4 (1,1 m)	
Beam Type	3N	
Construction Heighet / Width	95 cm / 33 cm	
Unital Type Test (ITT)	TB11: 0104\ME\HRB\20	Endorsement
	TB51: 0099\ME\HRB\20	

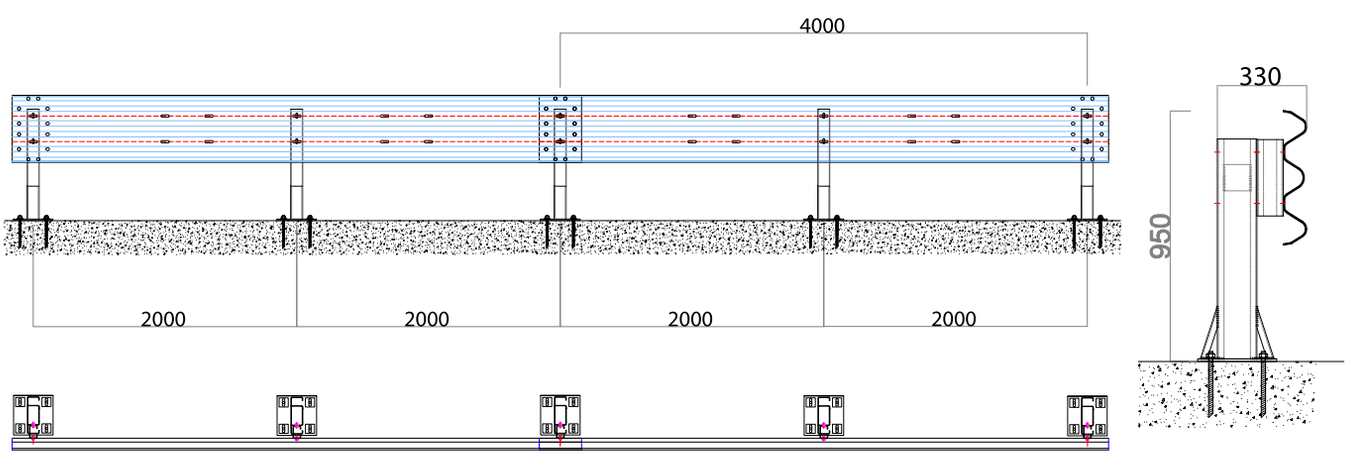

S.02.308

S.02.308 AG03H2SM 1.33 BRIDGE SYSTEM	
Containment Level According to EN 1317-2	H2
Impact Severity	B
Working Width	W2 (0,8 m)
Dynamic Deflection	0,6 m
Normalized Vehicle Intrusion	VI4 (1,1 m)
Beam Type	3N
Construction Heighet / Width	95 cm / 33 cm
Unital Type Test (ITT)	TB11: 0104\ME\HRB\20
	TB51: 0108\ME\HRB\20

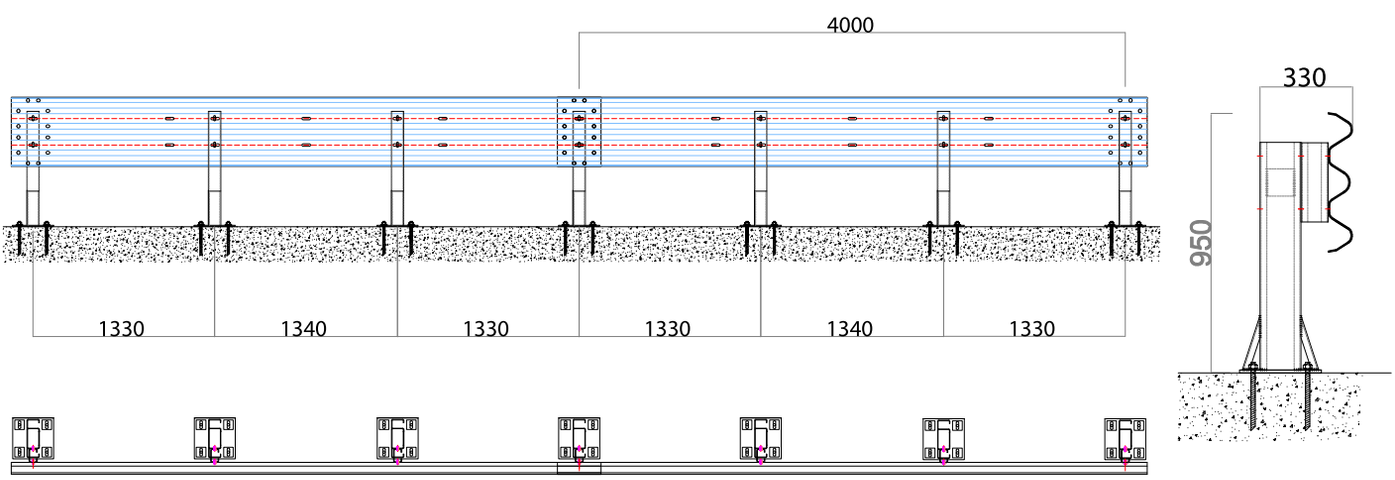

S.02.601

S.02.601 AG01H4b 2.00 BRIDGE SYSTEM	
Containment Level According to EN 1317-2	H4b
Impact Severity	A
Working Width	W3 (1,0 m)
Dynamic Deflection	0,7 m
Normalized Vehicle Intrusion	VI7 (2,3 m)
Beam Type	3N
Construction Heighet / Width	120 cm / 55 cm
Unital Type Test (ITT)	ALKBPM13111 Endorsement
	TB81: 0066\ME\HRB\14

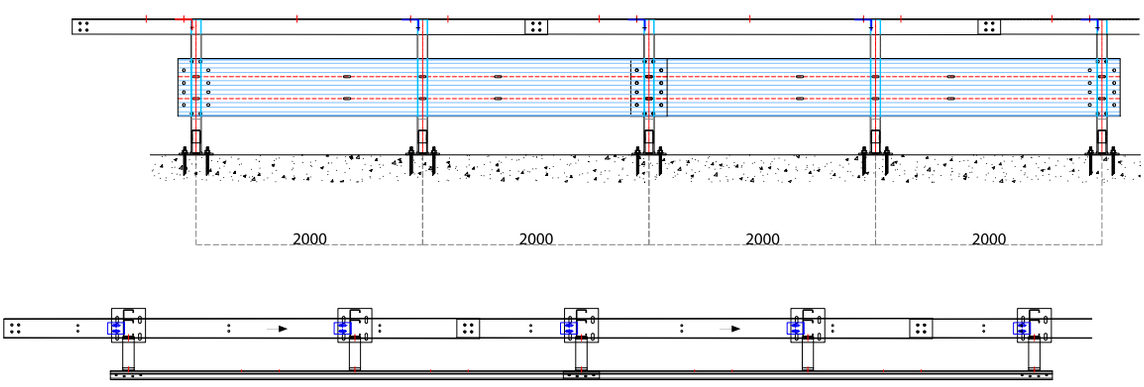

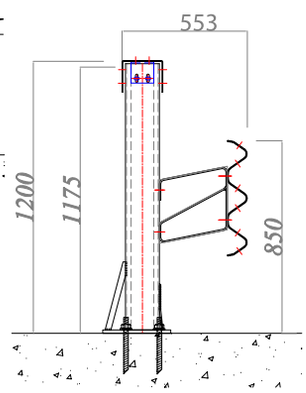

Double Sided Driven Guardrail Systems

NO	SYTEMS NAME	CLASS
3.1	S.03.301 AG04H1 1.33 double System	H4-W3-B

S.02.301

S.02.301 AG04H2 1.33 DOUBLE SYSTEM		
Containment Level According to EN 1317-2	H2	
Impact Severity	B	
Working Width	W3 (1,0 m)	
Dynamic Deflection	0,9 m	
Normalized Vehicle Intrusion	VI5 (1,4 m)	
Beam Type	A, B	
Construction Heighet / Width	78 cm / 29 cm	
Unital Type Test (ITT)	TB11: 0056\ME\HRB\15	Endorsement
	TB51: 0060\ME\HRB\14	

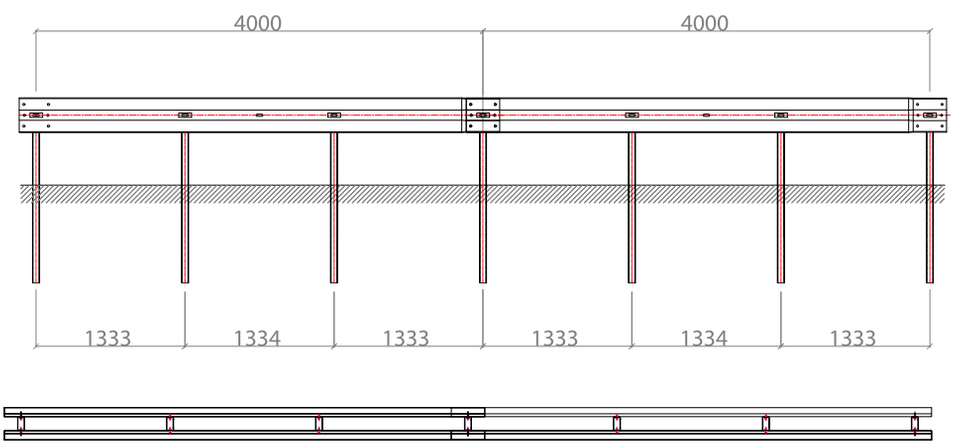

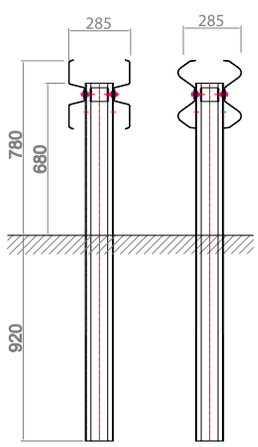

Double Sided Bridge Guardrail Systems

NO	SYTEMS NAME	CLASS
4.1	S.04.301 AG02H2 Bridge (double) System	H4-W2-B

S.02.301

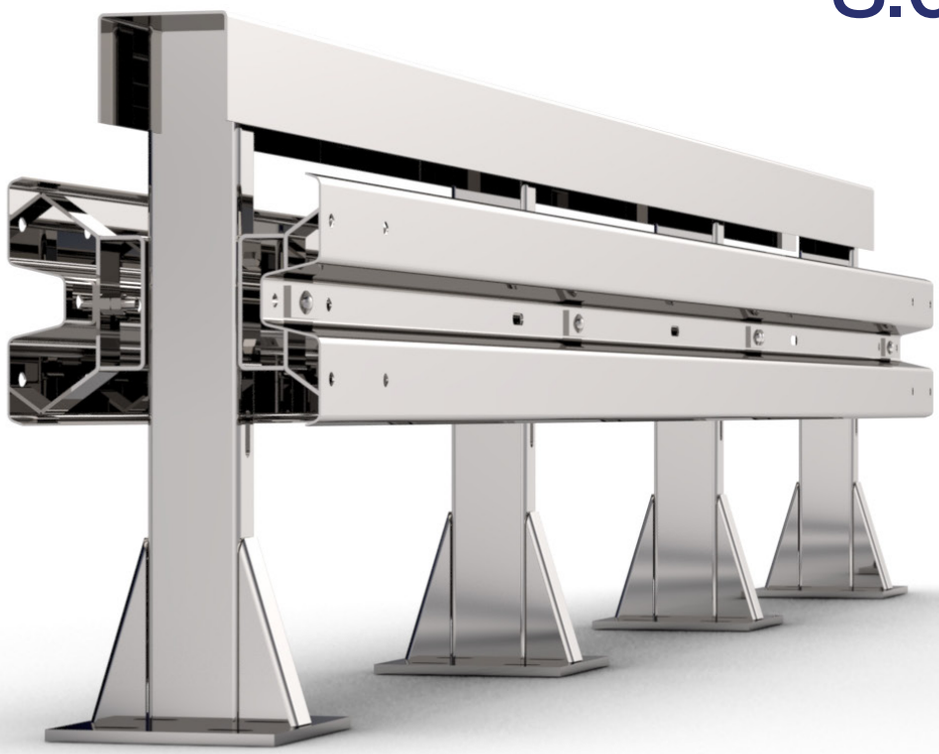

S.04.301 AG02H2 BRIDGE SYSTEM (DOUBLE)	
Containment Level According to EN 1317-2	H2
Impact Severity	B
Working Width	W2 (0,8 m)
Dynamic Deflection	0,4 m
Normalized Vehicle Intrusion	VI3 (0,9 m)
Beam Type	A, B
Construction Heighet / Width	90 cm / 41 cm
Unital Type Test (ITT)	TB11: 0100\ME\HRB\13
	TB51: 0102\ME\HRB\13

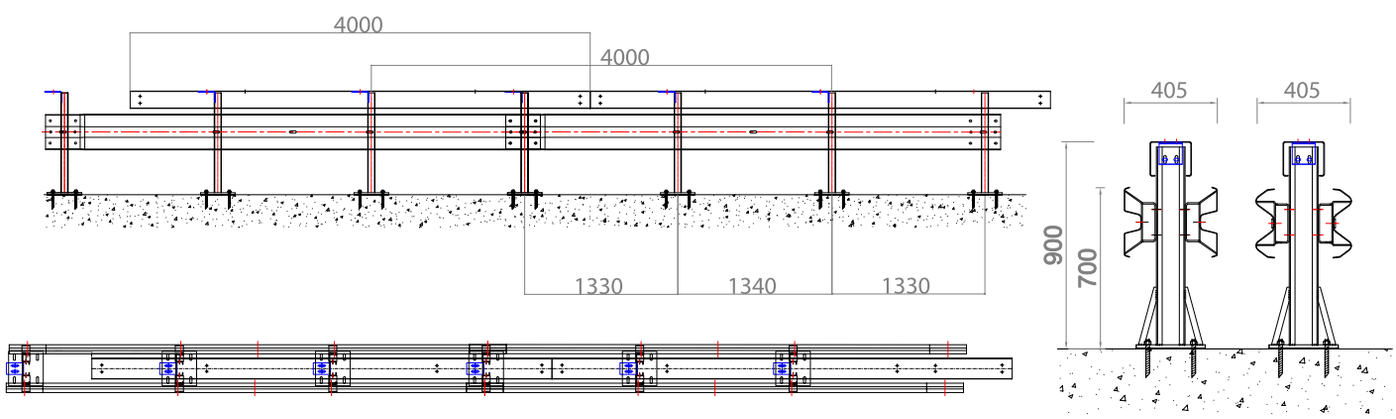

İES GALVANİZ

20.000 m²

Closed Area

ROAD RESTRAINT SYSTEMS

This Europsan Standard was approved by CEN on 5 March 1998

CEN members are bound to comply with the CEN/CENELEC intemal Regulations wtich stipulate the condtions for giving this Europcan Standard te status of a national standard without any alteration, Up-to-date lists and bibliographical references concerning such national standards may be obtained on application to the Central Secretarial or to any CEN member.

This European Standard exists in three official versions (English, French, German). A version in any othor language made by translation under the responsibility of a CEN member into its own language and notified to the Central Secretariat has the same status as the official versions.

CEN members are the national standards bodies ol Austria, Belgium, Czech Ropublic, Donmark, Finland, France, Germany, Greece. loctand, Ireland, Italy, Luxombourg, Netherlands, Norway, Portugal, Spain, Sweden, Switzerland and United Kingdom.

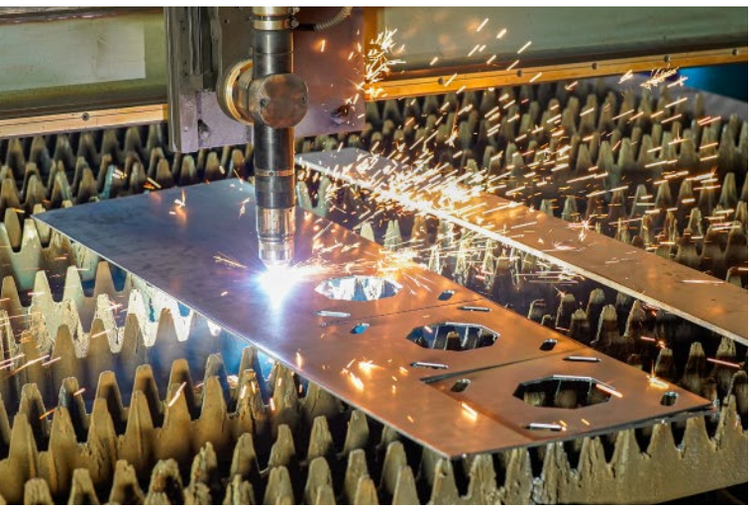

IES GALVANIZ

SERTIFIKA • CERTIFICATE • ZERTIFIKAT • CERTIFICAT • CERTIFICADO

b&a

CERTIFICATE OF CONSTANCY OF PERFORMANCE
2344 – CPR – 0307/O
System 1

In compliance the Regulation 305/2011/EU of the Council of European Communities of 09 March 2011 on the approximation of laws, regulations and administrative provisions of the Member States relating to the construction products (Construction Products Regulation - CPR).

PRODUCT : Road Safety Barrier - Mod. AG04 H2 1.33 double

PERFORMANCE UNDER IMPACT EN 1317-2:2010	Product Type/Series H2-W3-B (Type A ve B)
Containment Level	H2
Impact Severity	B
Normalized Workin Width	W3 (1.0 m)
Normalized Dynamic Deflection	0.8 m
Normalized Vehicle Intrusion	VI5 (1.4 m)
Type of Installation	Soil
Identification/Test Report	H2 class double sided barrier for installation on soil Mod. AG04 H2 1.33 double
Impact Test Type	Test Reports – CSI TB51: [illegible] TB11: [illegible] Endorsement: [illegible]
Durability	Galvanized in accordance with EN ISO 1461
Dangerous Substance Content	NPD

** The performance of these product meets the specifications and standards according to the CSI test reports mentioned above.

placed on the market and produced in the factor by,

İES GALVANİZ SAN. VE TİC. AŞ.

Address

Büyüktüysüz Mah. E. Ayhan Tosyalı Cad. No:11 Tüysüz Beldesi
Toprakkale / Osmaniye

is submitted by the manufacturer to a factory production control and to the further testing of samples taken at the factory in accordance with a prescribed test plan and that the approved body

- 2344 BvA -

has performed the initial inspection of the factory and of the factory production control and performs the continuous surveillance, assessment and approval of the factory production control.
This certificate attests that all provisions concerning the attestation of factory production control described in Annex ZA of the standard (resp. in)

EN 1317-5:2007+A2:2012/AC:2012

This certificate remains valid with the following dates as long as the conditions laid down in the harmonized technical specification in reference or the manufacturing conditions in the factory or the FPC itself are not modified significantly.

Initial Certificate Date : 19.12.2024
Issue Date : 19.12.2024
Certification Period Expiry Date : 18.12.2029
Certificate Expiry Date : 18.12.2025

Sayfa 2

SERTIFIKA • CERTIFICATE • ZERTIFIKAT • CERTIFICAT • CERTIFICADO

b&a

CERTIFICATE OF CONSTANCY OF PERFORMANCE
2344 – CPR – 0307/A
System 1

In compliance the Regulation 305/2011/EU of the Council of European Communities of 09 March 2011 on the approximation of laws, regulations and administrative provisions of the Member States relating to the construction products (Construction Products Regulation - CPR).

PRODUCT : Road Safety Barrier - Mod. AG04 M 2.00

PERFORMANCE UNDER IMPACT EN 1317-2:2010	Product Type/Series H1-W4-A (Type A and B) N2-W2-A (Type A and B)
Containment Level	H1 N2
Impact Severity	A
Normalized Workin Width	W4 (1.1 m) (H1) W2 (0.8 m) (N2)
Normalized Dynamic Deflection	1.0 m (H1) 0.6 m (N2)
Normalized Vehicle Intrusion	VI6 (1.8 m)
Type of Installation	Soil
Identification/Test Report	H1 class Monolateral barrier for installation on soil Mod. AG04 M 2.00
Impact Test Type	Test Reports – CSI TB32: [illegible] TB11: [illegible] TB42: [illegible] Endorsement: [illegible] Endorsement: [illegible] Endorsement: [illegible] Endorsement: [illegible]
Durability	Galvanized in accordance with EN ISO 1461
Dangerous Substance Content	NPD

** The performance of these product meets the specifications and standards according to the CSI test reports mentioned above.

placed on the market and produced in the factor by,

İES GALVANİZ SAN. VE TİC. AŞ.

Address

Büyüktüysüz Mah. E. Ayhan Tosyalı Cad. No:11 Tüysüz Beldesi
Toprakkale / Osmaniye

is submitted by the manufacturer to a factory production control and to the further testing of samples taken at the factory in accordance with a prescribed test plan and that the approved body

- 2344 BvA -

has performed the initial inspection of the factory and of the factory production control and performs the continuous surveillance, assessment and approval of the factory production control.
This certificate attests that all provisions concerning the attestation of factory production control described in Annex ZA of the standard (resp. in)

EN 1317-5:2007+A2:2012/AC:2012

This certificate remains valid with the following dates as long as the conditions laid down in the harmonized technical specification in reference or the manufacturing conditions in the factory or the FPC itself are not modified significantly.

Initial Certificate Date : 19.12.2024
Issue Date : 19.12.2024
Certification Period Expiry Date : 18.12.2029
Certificate Expiry Date : 18.12.2025

Sayfa 2

SERTIFIKA • CERTIFICATE • ZERTIFIKAT • CERTIFICAT • CERTIFICADO

b&a

CERTIFICATE OF CONSTANCY OF PERFORMANCE
2344 – CPR – 0307/K
System 1

In compliance the Regulation 305/2011/EU of the Council of European Communities of 09 March 2011 on the approximation of laws, regulations and administrative provisions of the Member States relating to the construction products (Construction Products Regulation - CPR).

PRODUCT : Road Safety Barrier - Mod. AG04 H2 M 2.00 Bridge

PERFORMANCE UNDER IMPACT EN 1317-2:2010	Product Type/Series H2-W4-B
Containment Level	H2
Impact Severity	B
Normalized Workin Width	W4 (1.2 m)
Normalized Dynamic Deflection	0.9 m
Normalized Vehicle Intrusion	VI5 (1.5 m)
Type of Installation	Concrete
Identification/Test Report	H2 class Monolateral barrier for installation on concrete Mod. AG04 H2 M 2.00 Bridge
Impact Test Type	Test Reports – CSI TB51: [illegible] TB11: [illegible] Endorsement: [illegible] Endorsement: [illegible]
Durability	Galvanized in accordance with EN ISO 1461
Dangerous Substance Content	NPD

** The performance of these product meets the specifications and standards according to the CSI test reports mentioned above.

placed on the market and produced in the factor by,

İES GALVANİZ SAN. VE TİC. AŞ.

Address

Büyüktüysüz Mah. E. Ayhan Tosyalı Cad. No:11 Tüysüz Beldesi
Toprakkale / Osmaniye

is submitted by the manufacturer to a factory production control and to the further testing of samples taken at the factory in accordance with a prescribed test plan and that the approved body

- 2344 BvA -

has performed the initial inspection of the factory and of the factory production control and performs the continuous surveillance, assessment and approval of the factory production control.
This certificate attests that all provisions concerning the attestation of factory production control described in Annex ZA of the standard (resp. in)

EN 1317-5:2007+A2:2012/AC:2012

This certificate remains valid with the following dates as long as the conditions laid down in the harmonized technical specification in reference or the manufacturing conditions in the factory or the FPC itself are not modified significantly.

Initial Certificate Date : 19.12.2024
Issue Date : 19.12.2024
Certification Period Expiry Date : 18.12.2029
Certificate Expiry Date : 18.12.2025

Sayfa 2

SERTIFIKA • CERTIFICATE • ZERTIFIKAT • CERTIFICAT • CERTIFICADO

b&a

CERTIFICATE OF CONSTANCY OF PERFORMANCE
2344 – CPR – 0307/J
System 1

In compliance the Regulation 305/2011/EU of the Council of European Communities of 09 March 2011 on the approximation of laws, regulations and administrative provisions of the Member States relating to the construction products (Construction Products Regulation - CPR).

PRODUCT : Road Safety Barrier - Mod. AG04 1.33 Bridge

PERFORMANCE UNDER IMPACT EN 1317-2:2010	Product Type/Series H1-W1-B (Type A and B)
Containment Level	H1
Impact Severity	B
Normalized Workin Width	W1 (0.5 m)
Normalized Dynamic Deflection	0.3 m
Normalized Vehicle Intrusion	VI4 (1.2 m)
Type of Installation	Concrete
Identification/Test Report	H1 class Monolateral barrier for installation on concrete Mod. AG04 1.33 Bridge
Impact Test Type	Test Reports – CSI TB42: [illegible] TB11: [illegible] Endorsement: [illegible]
Durability	Galvanized in accordance with EN ISO 1461
Dangerous Substance Content	NPD

** The performance of these product meets the specifications and standards according to the CSI test reports mentioned above.

placed on the market and produced in the factor by,

İES GALVANİZ SAN. VE TİC. AŞ.

Address

Büyüktüysüz Mah. E. Ayhan Tosyalı Cad. No:11 Tüysüz Beldesi
Toprakkale / Osmaniye

is submitted by the manufacturer to a factory production control and to the further testing of samples taken at the factory in accordance with a prescribed test plan and that the approved body

- 2344 BvA -

has performed the initial inspection of the factory and of the factory production control and performs the continuous surveillance, assessment and approval of the factory production control.
This certificate attests that all provisions concerning the attestation of factory production control described in Annex ZA of the standard (resp. in)

EN 1317-5:2007+A2:2012/AC:2012

This certificate remains valid with the following dates as long as the conditions laid down in the harmonized technical specification in reference or the manufacturing conditions in the factory or the FPC itself are not modified significantly.

Initial Certificate Date : 19.12.2024
Issue Date : 19.12.2024
Certification Period Expiry Date : 18.12.2029
Certificate Expiry Date : 18.12.2025

Sayfa 2

SERTIFIKA • CERTIFICATE • ZERTIFIKAT • CERTIFICAT • CERTIFICADO

b&a

CERTIFICATE OF CONSTANCY OF PERFORMANCE
2344 – CPR – 0307/I
System 1

In compliance the Regulation 305/2011/EU of the Council of European Communities of 09 March 2011 on the approximation of laws, regulations and administrative provisions of the Member States relating to the construction products (Construction Products Regulation - CPR).

PRODUCT : Road Safety Barrier - Mod. AG04 2.00 Bridge

PERFORMANCE UNDER IMPACT EN 1317-2:2010	Product Type/Series H1-W2-A (Type B) H1-W2-B (Type A)
Containment Level	H1
Impact Severity	A (Type B), B (Type A)
Normalized Workin Width	W2 (0.8 m)
Normalized Dynamic Deflection	0.7 m
Normalized Vehicle Intrusion	VI8 (2.8 m)
Type of Installation	Concrete
Identification/Test Report	H1 class Monolateral barrier for installation on concrete Mod. AG04 2.00 Bridge
Impact Test Type	Test Reports – CSI TB42: [illegible] TB11: [illegible] Endorsement: [illegible]
Durability	Galvanized in accordance with EN ISO 1461
Dangerous Substance Content	NPD

** The performance of these product meets the specifications and standards according to the CSI test reports mentioned above.

placed on the market and produced in the factor by,

İES GALVANİZ SAN. VE TİC. AŞ.

Address

Büyüktüysüz Mah. E. Ayhan Tosyalı Cad. No:11 Tüysüz Beldesi
Toprakkale / Osmaniye

is submitted by the manufacturer to a factory production control and to the further testing of samples taken at the factory in accordance with a prescribed test plan and that the approved body

- 2344 BvA -

has performed the initial inspection of the factory and of the factory production control and performs the continuous surveillance, assessment and approval of the factory production control.
This certificate attests that all provisions concerning the attestation of factory production control described in Annex ZA of the standard (resp. in)

EN 1317-5:2007+A2:2012/AC:2012

This certificate remains valid with the following dates as long as the conditions laid down in the harmonized technical specification in reference or the manufacturing conditions in the factory or the FPC itself are not modified significantly.

Initial Certificate Date : 19.12.2024
Issue Date : 19.12.2024
Certification Period Expiry Date : 18.12.2029
Certificate Expiry Date : 18.12.2025

Sayfa 2

SERTIFIKA • CERTIFICATE • ZERTIFIKAT • CERTIFICAT • CERTIFICADO

b&a

CERTIFICATE OF CONSTANCY OF PERFORMANCE
2344 – CPR – 0307/H
System 1

In compliance the Regulation 305/2011/EU of the Council of European Communities of 09 March 2011 on the approximation of laws, regulations and administrative provisions of the Member States relating to the construction products (Construction Products Regulation - CPR).

PRODUCT : Road Safety Barrier - Mod. AG01 H4b 2.00

PERFORMANCE UNDER IMPACT EN 1317-2:2010	Product Type/Series H4b-W5-A
Containment Level	H4b
Impact Severity	A
Normalized Workin Width	W5 (1.7 m)
Normalized Dynamic Deflection	1.6 m
Normalized Vehicle Intrusion	VI5 (1.9 m)
Type of Installation	Soil
Identification/Test Report	H4b class Monolateral barrier for installation on soil Mod. AG01 H4b 2.00
Impact Test Type	Test Reports – CSI TB81: [illegible] TB11: [illegible]
Durability	Galvanized in accordance with EN ISO 1461
Dangerous Substance Content	NPD

** The performance of these product meets the specifications and standards according to the CSI test reports mentioned above.

placed on the market and produced in the factor by,

İES GALVANİZ SAN. VE TİC. AŞ.

Address

Büyüktüysüz Mah. E. Ayhan Tosyalı Cad. No:11 Tüysüz Beldesi
Toprakkale / Osmaniye

is submitted by the manufacturer to a factory production control and to the further testing of samples taken at the factory in accordance with a prescribed test plan and that the approved body

- 2344 BvA -

has performed the initial inspection of the factory and of the factory production control and performs the continuous surveillance, assessment and approval of the factory production control.
This certificate attests that all provisions concerning the attestation of factory production control described in Annex ZA of the standard (resp. in)

EN 1317-5:2007+A2:2012/AC:2012

This certificate remains valid with the following dates as long as the conditions laid down in the harmonized technical specification in reference or the manufacturing conditions in the factory or the FPC itself are not modified significantly.

Initial Certificate Date : 19.12.2024
Issue Date : 19.12.2024
Certification Period Expiry Date : 18.12.2029
Certificate Expiry Date : 18.12.2025

Sayfa 2

SERTIFIKA • CERTIFICATE • ZERTIFIKAT • CERTIFICAT • CERTIFICADO

b&a

CERTIFICATE OF CONSTANCY OF PERFORMANCE
2344 – CPR – 0307/G
System 1

In compliance the Regulation 305/2011/EU of the Council of European Communities of 09 March 2011 on the approximation of laws, regulations and administrative provisions of the Member States relating to the construction products (Construction Products Regulation - CPR).

PRODUCT : Road Safety Barrier - Mod. AG02 H2 1.33

PERFORMANCE UNDER IMPACT EN 1317-2:2010	Product Type/Series H2-W2-A
Containment Level	H2
Impact Severity	A
Normalized Workin Width	W2 (0.8 m)
Normalized Dynamic Deflection	0.7 m
Normalized Vehicle Intrusion	VI3 (1.0 m)
Type of Installation	Soil
Identification/Test Report	H2 class Monolateral barrier for installation on soil Mod. AG02 H2 1.33
Impact Test Type	Test Reports – CSI TB51: [illegible] TB11: [illegible]
Durability	Galvanized in accordance with EN ISO 1461
Dangerous Substance Content	NPD

** The performance of these product meets the specifications and standards according to the CSI test reports mentioned above.

placed on the market and produced in the factor by,

İES GALVANİZ SAN. VE TİC. AŞ.

Address

Büyüktüysüz Mah. E. Ayhan Tosyalı Cad. No:11 Tüysüz Beldesi
Toprakkale / Osmaniye

is submitted by the manufacturer to a factory production control and to the further testing of samples taken at the factory in accordance with a prescribed test plan and that the approved body

- 2344 BvA -

has performed the initial inspection of the factory and of the factory production control and performs the continuous surveillance, assessment and approval of the factory production control.
This certificate attests that all provisions concerning the attestation of factory production control described in Annex ZA of the standard (resp. in)

EN 1317-5:2007+A2:2012/AC:2012

This certificate remains valid with the following dates as long as the conditions laid down in the harmonized technical specification in reference or the manufacturing conditions in the factory or the FPC itself are not modified significantly.

Initial Certificate Date : 19.12.2024
Issue Date : 19.12.2024
Certification Period Expiry Date : 18.12.2029
Certificate Expiry Date : 18.12.2025

Sayfa 2

SERTIFIKA • CERTIFICATE • ZERTIFIKAT • CERTIFICAT • CERTIFICADO

b&a

CERTIFICATE OF CONSTANCY OF PERFORMANCE
2344 – CPR – 0307/F
System 1

In compliance the Regulation 305/2011/EU of the Council of European Communities of 09 March 2011 on the approximation of laws, regulations and administrative provisions of the Member States relating to the construction products (Construction Products Regulation - CPR).

PRODUCT : Road Safety Barrier - Mod. AG03 H2 SM 2.00

PERFORMANCE UNDER IMPACT EN 1317-2:2010	Product Type/Series H2-W3-A
Containment Level	H2
Impact Severity	A
Normalized Workin Width	W3 (0.9 m)
Normalized Dynamic Deflection	0.6 m
Normalized Vehicle Intrusion	VI4 (1.2 m)
Type of Installation	Soil
Identification/Test Report	H2 class Monolateral barrier for installation on soil Mod. AG03 H2 SM 2.00
Impact Test Type	Test Reports – CSI TB51: [illegible] TB11: [illegible]
Durability	Galvanized in accordance with EN ISO 1461
Dangerous Substance Content	NPD

** The performance of these product meets the specifications and standards according to the CSI test reports mentioned above.

placed on the market and produced in the factor by,

İES GALVANİZ SAN. VE TİC. AŞ.

Address

Büyüktüysüz Mah. E. Ayhan Tosyalı Cad. No:11 Tüysüz Beldesi
Toprakkale / Osmaniye

is submitted by the manufacturer to a factory production control and to the further testing of samples taken at the factory in accordance with a prescribed test plan and that the approved body

- 2344 BvA -

has performed the initial inspection of the factory and of the factory production control and performs the continuous surveillance, assessment and approval of the factory production control.
This certificate attests that all provisions concerning the attestation of factory production control described in Annex ZA of the standard (resp. in)

EN 1317-5:2007+A2:2012/AC:2012

This certificate remains valid with the following dates as long as the conditions laid down in the harmonized technical specification in reference or the manufacturing conditions in the factory or the FPC itself are not modified significantly.

Initial Certificate Date : 19.12.2024
Issue Date : 19.12.2024
Certification Period Expiry Date : 18.12.2029
Certificate Expiry Date : 18.12.2025

Sayfa 2

SERTIFIKA • CERTIFICATE • ZERTIFIKAT • CERTIFICAT • CERTIFICADO

b&a

CERTIFICATE OF CONSTANCY OF PERFORMANCE
2344 – CPR – 0307/E
System 1

In compliance the Regulation 305/2011/EU of the Council of European Communities of 09 March 2011 on the approximation of laws, regulations and administrative provisions of the Member States relating to the construction products (Construction Products Regulation - CPR).

PRODUCT : Road Safety Barrier - Mod. AG03 H2 2.66

PERFORMANCE UNDER IMPACT EN 1317-2:2010	Product Type/Series H2-W4-A
Containment Level	H2
Impact Severity	A
Normalized Workin Width	W4 (1.2 m)
Normalized Dynamic Deflection	1.1 m
Normalized Vehicle Intrusion	VI5 (1.5 m)
Type of Installation	Soil
Identification/Test Report	H2 class Monolateral barrier for installation on soil Mod. AG03 H2 2.66
Impact Test Type	Test Reports – CSI TB11: [illegible] TB51: [illegible] Endrs: [illegible] Endorsement: [illegible]
Durability	Galvanized in accordance with EN ISO 1461
Dangerous Substance Content	NPD

** The performance of these product meets the specifications and standards according to the CSI test reports mentioned above.

placed on the market and produced in the factor by,

İES GALVANİZ SAN. VE TİC. AŞ.

Address

Büyüktüysüz Mah. E. Ayhan Tosyalı Cad. No:11 Tüysüz Beldesi
Toprakkale / Osmaniye

is submitted by the manufacturer to a factory production control and to the further testing of samples taken at the factory in accordance with a prescribed test plan and that the approved body

- 2344 BvA -

has performed the initial inspection of the factory and of the factory production control and performs the continuous surveillance, assessment and approval of the factory production control.
This certificate attests that all provisions concerning the attestation of factory production control described in Annex ZA of the standard (resp. in)

EN 1317-5:2007+A2:2012/AC:2012

This certificate remains valid with the following dates as long as the conditions laid down in the harmonized technical specification in reference or the manufacturing conditions in the factory or the FPC itself are not modified significantly.

Initial Certificate Date : 19.12.2024
Issue Date : 19.12.2024
Certification Period Expiry Date : 18.12.2029
Certificate Expiry Date : 18.12.2025

Sayfa 2

SERTIFIKA • CERTIFICATE • ZERTIFIKAT • CERTIFICAT • CERTIFICADO

b&a

CERTIFICATE OF CONSTANCY OF PERFORMANCE
2344 – CPR – 0307/D
System 1

In compliance the Regulation 305/2011/EU of the Council of European Communities of 09 March 2011 on the approximation of laws, regulations and administrative provisions of the Member States relating to the construction products (Construction Products Regulation - CPR).

PRODUCT : Road Safety Barrier - Mod. AG03 H2 M 2.00

PERFORMANCE UNDER IMPACT EN 1317-2:2010	Product Type/Series
	H2-W4-A
Containment Level	H2
Impact Severity	A
Normalized Workin Width	W4 (1,2 m)
Normalized Dynamic Deflection	1,2 m
Normalized Vehicle Intrusion	VI3 (1,3)
Type of Installation	Soil
Identification/Test Report	H1 class Monolateral barrier for installation on soil Mod. AG03 H2 M 2.00
Impact Test Type	Test Reports – CSI TB11: 0069AMEHRB12 TB51: 0058AMEHRB14 Endorsement: 0067AMEHRB14 Endorsement: 0068AMEHRB15
Durability	Galvanized in accordance with EN ISO 1461
Dangerous Substance Content	NPD

** The performance of these product meets the specifications and standards according to the CSI test reports mentioned above.

placed on the market and produced in the factor by,

İES GALVANİZ SAN. VE TİC. AŞ.

Address

Büyüktüysüz Mah. E. Ayhan Tosyalı Cad. No:11 Tüysüz Beldesi
Toprakkale / Osmaniye

is submitted by the manufacturer to a factory production control and to the further testing of samples taken at the factory in accordance with a prescribed test plan and that the approved body

- 2344 BvA -

has performed the initial inspection of the factory and of the factory production control and performs the continuous surveillance, assessment and approval of the factory production control.
This certificate attests that all provisions concerning the attestation of factory production control described in Annex ZA of the standard (resp. in)

EN 1317-5:2007+A2:2012/AC:2012

This certificate remains valid with the following dates as long as the conditions laid down in the harmonized technical specification in reference or the manufacturing conditions in the factory or the FPC itself are not modified significantly.

Initial Certificate Date : 19.12.2024
Issue Date : 19.12.2024
Certification Period Expiry Date : 18.12.2029
Certificate Expiry Date : 18.12.2025

Sayfa 2

SERTIFIKA • CERTIFICATE • ZERTIFIKAT • CERTIFICAT • CERTIFICADO

b&a

CERTIFICATE OF CONSTANCY OF PERFORMANCE
2344 – CPR – 0307/B
System 1

In compliance the Regulation 305/2011/EU of the Council of European Communities of 09 March 2011 on the approximation of laws, regulations and administrative provisions of the Member States relating to the construction products (Construction Products Regulation - CPR).

PRODUCT : Road Safety Barrier - Mod. AG04 M 2.66

PERFORMANCE UNDER IMPACT EN 1317-2:2010	Product Type/Series
	H1-W3-A (Type A and B) N2-W3-A (Type A and B)
Containment Level	H1 N2
Impact Severity	A
Normalized Workin Width	W5 (1,5 m) (H1) W2 (0,8 m) (N2)
Normalized Dynamic Deflection	0,9 m (H1) 0,7 m (N2)
Normalized Vehicle Intrusion	VI5 (1,6 m)
Type of Installation	Soil
Identification/Test Report	H1 class Monolateral barrier for installation on soil Mod. AG04 M 2.66
Impact Test Type	Test Reports – CSI TB42: 0138AMEHRB14 TB11: 0142AMEHRB14 TB32: 0150AMEHRB14 Endorsement: 0033AMEHRB15 Endorsement: 0050AMEHRB15
Durability	Galvanized in accordance with EN ISO 1461
Dangerous Substance Content	NPD

** The performance of these product meets the specifications and standards according to the CSI test reports mentioned above.

placed on the market and produced in the factor by,

İES GALVANİZ SAN. VE TİC. AŞ.

Address

Büyüktüysüz Mah. E. Ayhan Tosyalı Cad. No:11 Tüysüz Beldesi
Toprakkale / Osmaniye

is submitted by the manufacturer to a factory production control and to the further testing of samples taken at the factory in accordance with a prescribed test plan and that the approved body

- 2344 BvA -

has performed the initial inspection of the factory and of the factory production control and performs the continuous surveillance, assessment and approval of the factory production control.
This certificate attests that all provisions concerning the attestation of factory production control described in Annex ZA of the standard (resp. in)

EN 1317-5:2007+A2:2012/AC:2012

This certificate remains valid with the following dates as long as the conditions laid down in the harmonized technical specification in reference or the manufacturing conditions in the factory or the FPC itself are not modified significantly.

Initial Certificate Date : 19.12.2024
Issue Date : 19.12.2024
Certification Period Expiry Date : 18.12.2029
Certificate Expiry Date : 18.12.2025

Sayfa 2

SERTIFIKA • CERTIFICATE • ZERTIFIKAT • CERTIFICAT • CERTIFICADO

b&a

CERTIFICATE OF CONSTANCY OF PERFORMANCE
2344 – CPR – 0307/C
System 1

In compliance the Regulation 305/2011/EU of the Council of European Communities of 09 March 2011 on the approximation of laws, regulations and administrative provisions of the Member States relating to the construction products (Construction Products Regulation - CPR).

PRODUCT : Road Safety Barrier - Mod. AG04 H1 4.00

PERFORMANCE UNDER IMPACT EN 1317-2:2010	Product Type/Series
	H1-W4-A (Type A and B) N2-W4-A (Type A and B)
Containment Level	H1 N2
Impact Severity	A
Normalized Workin Width	W4 (1,2 m) (H1) W4 (1,2 m) (N2)
Normalized Dynamic Deflection	1,2 m (H1) 1,2 m (N2)
Normalized Vehicle Intrusion	VI8 (2,7 m)
Type of Installation	Soil
Identification/Test Report	H1 class Monolateral barrier for installation on soil Mod. AG04 H1 4.00
Impact Test Type	Test Reports – CSI TB42: 0024AMEHRB17 TB11: 0025AMEHRB17 TB32: 0027AMEHRB17 Endorsement: 0030AMEHRB17
Durability	Galvanized in accordance with EN ISO 1461
Dangerous Substance Content	NPD

** The performance of these product meets the specifications and standards according to the CSI test reports mentioned above.

placed on the market and produced in the factor by,

İES GALVANİZ SAN. VE TİC. AŞ.

Address

Büyüktüysüz Mah. E. Ayhan Tosyalı Cad. No:11 Tüysüz Beldesi
Toprakkale / Osmaniye

is submitted by the manufacturer to a factory production control and to the further testing of samples taken at the factory in accordance with a prescribed test plan and that the approved body

- 2344 BvA -

has performed the initial inspection of the factory and of the factory production control and performs the continuous surveillance, assessment and approval of the factory production control.
This certificate attests that all provisions concerning the attestation of factory production control described in Annex ZA of the standard (resp. in)

EN 1317-5:2007+A2:2012/AC:2012

This certificate remains valid with the following dates as long as the conditions laid down in the harmonized technical specification in reference or the manufacturing conditions in the factory or the FPC itself are not modified significantly.

Initial Certificate Date : 19.12.2024
Issue Date : 19.12.2024
Certification Period Expiry Date : 18.12.2029
Certificate Expiry Date : 18.12.2025

Sayfa 2

SERTIFIKA • CERTIFICATE • ZERTIFIKAT • CERTIFICAT • CERTIFICADO

b&a

CERTIFICATE OF CONSTANCY OF PERFORMANCE
2344 – CPR – 0307/P
System 1

In compliance the Regulation 305/2011/EU of the Council of European Communities of 09 March 2011 on the approximation of laws, regulations and administrative provisions of the Member States relating to the construction products (Construction Products Regulation - CPR).

PRODUCT : Road Safety Barrier - Mod. AG02 H2 Bridge

PERFORMANCE UNDER IMPACT EN 1317-2:2010	Product Type/Series
	H2-W2-B (Type A and B)
Containment Level	H2
Impact Severity	B
Normalized Workin Width	W2 (0,8 m)
Normalized Dynamic Deflection	0,4 m
Normalized Vehicle Intrusion	VI3 (0,9 m)
Type of Installation	Concrete
Identification/Test Report	H2 class double sided barrier for installation on concrete Mod. AG02 H2 Bridge
Impact Test Type	Test Reports – CSI TB11: 0100AMEHRB53 TB51: 0102AMEHRB53
Durability	Galvanized in accordance with EN ISO 1461
Dangerous Substance Content	NPD

** The performance of these product meets the specifications and standards according to the CSI test reports mentioned above.

placed on the market and produced in the factor by,

İES GALVANİZ SAN. VE TİC. AŞ.

Address

Büyüktüysüz Mah. E. Ayhan Tosyalı Cad. No:11 Tüysüz Beldesi
Toprakkale / Osmaniye

is submitted by the manufacturer to a factory production control and to the further testing of samples taken at the factory in accordance with a prescribed test plan and that the approved body

- 2344 BvA -

has performed the initial inspection of the factory and of the factory production control and performs the continuous surveillance, assessment and approval of the factory production control.
This certificate attests that all provisions concerning the attestation of factory production control described in Annex ZA of the standard (resp. in)

EN 1317-5:2007+A2:2012/AC:2012

This certificate remains valid with the following dates as long as the conditions laid down in the harmonized technical specification in reference or the manufacturing conditions in the factory or the FPC itself are not modified significantly.

Initial Certificate Date : 19.12.2024
Issue Date : 19.12.2024
Certification Period Expiry Date : 18.12.2029
Certificate Expiry Date : 18.12.2025

Sayfa 2

SERTIFIKA • CERTIFICATE • ZERTIFIKAT • CERTIFICAT • CERTIFICADO

b&a

CERTIFICATE OF CONSTANCY OF PERFORMANCE
2344 – CPR – 0307/L
System 1

In compliance the Regulation 305/2011/EU of the Council of European Communities of 09 March 2011 on the approximation of laws, regulations and administrative provisions of the Member States relating to the construction products (Construction Products Regulation - CPR).

PRODUCT : Road Safety Barrier - Mod. AG03 H2 SM 2.0 Bridge

PERFORMANCE UNDER IMPACT EN 1317-2:2010	Product Type/Series
	H2-W3-B
Containment Level	H2
Impact Severity	B
Normalized Workin Width	W3 (1,0 m)
Normalized Dynamic Deflection	0,7 m
Normalized Vehicle Intrusion	VI4 (1,1 m)
Type of Installation	Concrete
Identification/Test Report	H2 class Monolateral barrier for installation on concrete Mod. AG03 H2 SM 2.0 Bridge
Impact Test Type	Test Reports – CSI TB11: 0104AMEHRB20 TB51: 0090AMEHRB20 Endorsement: 0136AMEHRB20 R.1
Durability	Galvanized in accordance with EN ISO 1461
Dangerous Substance Content	NPD

** The performance of these product meets the specifications and standards according to the CSI test reports mentioned above.

placed on the market and produced in the factor by,

İES GALVANİZ SAN. VE TİC. AŞ.

Address

Büyüktüysüz Mah. E. Ayhan Tosyalı Cad. No:11 Tüysüz Beldesi
Toprakkale / Osmaniye

is submitted by the manufacturer to a factory production control and to the further testing of samples taken at the factory in accordance with a prescribed test plan and that the approved body

- 2344 BvA -

has performed the initial inspection of the factory and of the factory production control and performs the continuous surveillance, assessment and approval of the factory production control.
This certificate attests that all provisions concerning the attestation of factory production control described in Annex ZA of the standard (resp. in)

EN 1317-5:2007+A2:2012/AC:2012

This certificate remains valid with the following dates as long as the conditions laid down in the harmonized technical specification in reference or the manufacturing conditions in the factory or the FPC itself are not modified significantly.

Initial Certificate Date : 19.12.2024
Issue Date : 19.12.2024
Certification Period Expiry Date : 18.12.2029
Certificate Expiry Date : 18.12.2025

Sayfa 2

SERTIFIKA • CERTIFICATE • ZERTIFIKAT • CERTIFICAT • CERTIFICADO

b&a

CERTIFICATE OF CONSTANCY OF PERFORMANCE
2344 – CPR – 0307/M
System 1

In compliance the Regulation 305/2011/EU of the Council of European Communities of 09 March 2011 on the approximation of laws, regulations and administrative provisions of the Member States relating to the construction products (Construction Products Regulation - CPR).

PRODUCT : Road Safety Barrier - Mod. AG03 H2 SM 1.33 Bridge

PERFORMANCE UNDER IMPACT EN 1317-2:2010	Product Type/Series
	H2-W2-B
Containment Level	H2
Impact Severity	B
Normalized Workin Width	W2 (0,8 m)
Normalized Dynamic Deflection	0,6 m
Normalized Vehicle Intrusion	VI4 (1,1 m)
Type of Installation	Concrete
Identification/Test Report	H2 class Monolateral barrier for installation on concrete Mod. AG03 H2 SM 1.33 Bridge
Impact Test Type	Test Reports – CSI TB11: 0104AMEHRB20 TB51: 0106AMEHRB20
Durability	Galvanized in accordance with EN ISO 1461
Dangerous Substance Content	NPD

** The performance of these product meets the specifications and standards according to the CSI test reports mentioned above.

placed on the market and produced in the factor by,

İES GALVANİZ SAN. VE TİC. AŞ.

Address

Büyüktüysüz Mah. E. Ayhan Tosyalı Cad. No:11 Tüysüz Beldesi
Toprakkale / Osmaniye

is submitted by the manufacturer to a factory production control and to the further testing of samples taken at the factory in accordance with a prescribed test plan and that the approved body

- 2344 BvA -

has performed the initial inspection of the factory and of the factory production control and performs the continuous surveillance, assessment and approval of the factory production control.
This certificate attests that all provisions concerning the attestation of factory production control described in Annex ZA of the standard (resp. in)

EN 1317-5:2007+A2:2012/AC:2012

This certificate remains valid with the following dates as long as the conditions laid down in the harmonized technical specification in reference or the manufacturing conditions in the factory or the FPC itself are not modified significantly.

Initial Certificate Date : 19.12.2024
Issue Date : 19.12.2024
Certification Period Expiry Date : 18.12.2029
Certificate Expiry Date : 18.12.2025

Sayfa 2

SERTIFIKA • CERTIFICATE • ZERTIFIKAT • CERTIFICAT • CERTIFICADO

b&a

CERTIFICATE OF CONSTANCY OF PERFORMANCE
2344 – CPR – 0307/N
System 1

In compliance the Regulation 305/2011/EU of the Council of European Communities of 09 March 2011 on the approximation of laws, regulations and administrative provisions of the Member States relating to the construction products (Construction Products Regulation - CPR).

PRODUCT : Road Safety Barrier - Mod. AG01 H4b 2.00 Bridge

PERFORMANCE UNDER IMPACT EN 1317-2:2010	Product Type/Series	
	H4b-W3-A	
Containment Level	H4b	
Impact Severity	A	
Normalized Workin Width	W3 (1,0 m)	
Normalized Dynamic Deflection	0,7 m	
Normalized Vehicle Intrusion	VI7 (2,3 m)	
Type of Installation	Concrete	
Identification/Test Report	H4b class Monolateral barrier for installation on concrete Mod. AG01 H4b 2.00 Bridge	
Impact Test Type	Test Reports – CSI TB81: 0098AMEHRB14 Endorsement: 0074AMEHRB14 Endorsement: 0018AMEHRB16.R.1 Endorsement: 0042AMEHRB16	Test Report – LIER TB11: ALKDPM13111
Durability	Galvanized in accordance with EN ISO 1461	
Dangerous Substance Content	NPD	

** The performance of these product meets the specifications and standards according to the CSI test reports mentioned above.

placed on the market and produced in the factor by,

İES GALVANİZ SAN. VE TİC. AŞ.

Address

Büyüktüysüz Mah. E. Ayhan Tosyalı Cad. No:11 Tüysüz Beldesi
Toprakkale / Osmaniye

is submitted by the manufacturer to a factory production control and to the further testing of samples taken at the factory in accordance with a prescribed test plan and that the approved body

- 2344 BvA -

has performed the initial inspection of the factory and of the factory production control and performs the continuous surveillance, assessment and approval of the factory production control.
This certificate attests that all provisions concerning the attestation of factory production control described in Annex ZA of the standard (resp. in)

EN 1317-5:2007+A2:2012/AC:2012

This certificate remains valid with the following dates as long as the conditions laid down in the harmonized technical specification in reference or the manufacturing conditions in the factory or the FPC itself are not modified significantly.

Initial Certificate Date : 19.12.2024
Issue Date : 19.12.2024
Certification Period Expiry Date : 18.12.2029
Certificate Expiry Date : 18.12.2025

Sayfa 2

İES GALVANİZ

HOT DIP GALVANIZED AND STEEL MANUFACTURING FACTORY

IN 50.000 M2 AREA PRODUCTION CAPACITY: 100.000 TONS

Factory Location

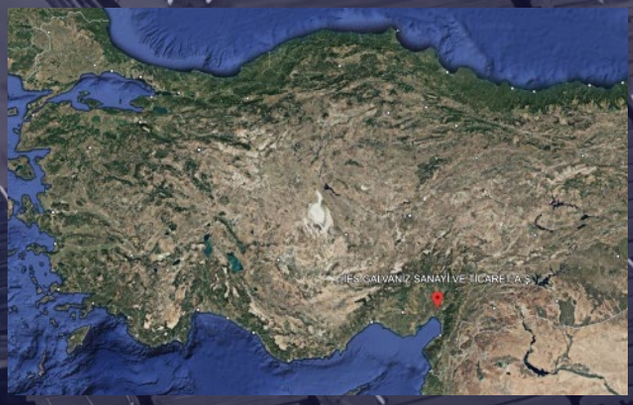

www.iesgalvaniz.com

İES GALVANİZ

EN

Büyüktüysüz Mah. E. Ayhan Tosyalı Cad. No: 11 Tüysüz Beldesi Toprakkale / Osmaniye / TÜRKİYE

T: +90 328 802 06 44 | F: +90 328 802 06 46 | E: info@iesgalvaniz.com.tr | www.iesgalvaniz.com.tr